venient, as in proportional control, to connect the position of the controls with the extent of the departure of the temperature from the set value. This can be done fairly readily with air-operated controllers (*vide infra*) in which the air-flow is throttled by a varying amount, resulting in variation of pressure in the head of a diaphragm valve regulating the flow of fuel gas, or other heating medium. The same principle of proportional control can, however, be used in mechanically-operated controllers, which move the valve by an expanding solid or fluid medium, as well as in electrically-operated controllers, so that the term proportional is more apt.

In the proportional type of control a given temperature of the medium surrounding the sensitive element causes the heating medium control-valve to assume a definite position corresponding to that temperature. This is the main disadvantage of this type, because if the mechanism is adjusted to maintain the correct temperature, for instance at the outlet of a heat-exchanger, any permanent variation in, say, the flow of liquid being heated would demand a permanent alteration in the position of the valve controlling, say, the steam for heating, in order to maintain the correct value of temperature.

The position of the valve is tied to the temperature, and cannot assume a permanent new value unless the temperature itself assumes a new value. The extent of the departure of the temperature from the desired value depends, of course, on the adjustment of the mechanism, in other words on the sensitivity of the controller, but this cannot be increased indefinitely because at a limiting value a self-sustained oscillation occurs. Stability can be secured to some extent by suitable compensation, and by means of double compensation the temperature can be automatically brought back to normal. When the magnitude of the disturbances is small, and little variations in working conditions occur, the proportional-control method works very well; but where great disturbances occur frequently, or where exact control is desired, satisfactory results are not always obtained, even when sensitivity is increased almost to the limiting value of self-sustained oscillation.

Proportional Reset Control.—This form of control is usually of the wide-band type, in which the valve position is reset automatically to compensate for the deviation of the control-point with the change of load characteristic of simple proportional control. The reset rate is usually slow. This form of control is relatively expensive and complicated. It avoids the continuous and violent hunting of on-and-off control in a process slow in response to control, and the wandering characteristic of wide-band instruments without reset. It is a proportional control capable of high accuracy under varying loads.

(3) **The "Floating"-Control Method.**—The name "integrating" control is sometimes given to this classification. In this system the

controls are not placed in a position directly related to the temperature, but are slowly moved, sometimes continuously, in one direction or the other, the rate of motion and its direction depending on the direction and extent of the deviation of the temperature from the desired value. The valve is thus kept slowly oscillating. If hunting is to be avoided, the rate of motion of the control valve must be very slow, which is the main disadvantage of the " floating " method.

In another type with " high-off-low " contacts there is a definite inert space, or dead zone, between the two contacts, which further limits valve motion.

The benefits of both the " proportional " and " floating " methods of control can be secured by using the proportional method as the basis of control, with the floating method to give a slow motion of the controls. The mechanism imposing the floating action on the proportional controllers is known as a " stabilizer."

The floating control in itself is not in common use, but as a component of more complex types, as that just indicated, it is quite important.

Other names for this duplex type are :—" throttling-plus-floating," " throttling-plus-reset," " proportional reset," etc.

A form of control closely allied to the simple two-position class is what has once been termed the " two-position with rate " control, or what is more commonly called the " constant-speed floating " control. As the term implies, it differs from the two-position type in that it gives to the action of the controlling mechanism a definite rate when the temperature is on one side or the other of the control setting.

CHAPTER VII

INDUSTRIAL TYPES OF REGULATORS BASED ON THE EXPANSION OF A LIQUID.

REGULATORS of the liquid-expansion class have found extensive application for the heat control of industrial furnaces and boilers, and for domestic purposes. Instruments of this group can be divided into two types :—

(1) Self-operated.
(2) Air-, steam- or water-operated.

The latter are by far the most commonly used industrially.

Principle of Operation of Self-operated Controllers.—The sensitive bulb in the instruments of this first class is connected directly or by capillary tubing to a pressure-responsive element adapted to operate a valve or electrical contacts. Adjustment of the control temperature is usually made by regulating the pressure of a spring or arrangement of lever and weight which opposes the actuating pressure. The force available to close a valve is small, so that there is a risk of incomplete " shut-off," which may result in a slow rise of temperature, with consequent damage to the instrument itself.

It is almost invariably necessary to have a large sensitive bulb when the pressure-responsive element is a bellows operating a valve, and this gives rise to difficulty in installation, apart from a disadvantageous time-lag in heat transfer to the sensitive bulb and contents.

The sensitive element may contain liquid of the volatile type, or of a non-volatile type like mercury, or even a gas-filled element may be used. When the volatile-liquid type is used, the flexible tube connecting the bulb to the valve-actuating bellows should extend down on the inside of the regulator bulb so that its end shall always be immersed below the surface of the thermo-sensitive liquid, thereby constituting a " trapped-vapour " construction preventing any of the vapour formed in the bulb from passing over to the bellows, and ensuring that the power shall be transmitted entirely by liquid pressure. If this were not so, and any vapour were allowed to pass over into the bellows, this vapour would condense in the cooled bellows and no pressure could be built up until sufficient liquid had distilled over into the bellows to fill them. On the reverse operation, it would be necessary for all the liquid in the bellows to be redistilled back into the bulb.

In cases where it is inconvenient to place a sensitive bulb in the tank of a machine, it may be possible to incorporate the sensitive element in the pipe-lines. A suitable pipe, through which the liquid to be controlled circulates, is made double-walled for a certain length. The inner tube may be plain or corrugated. The space between the two walls is filled with a volatile liquid and hermetically sealed, except for a connection by means of a capillary tube to the control valve. With this form of instrument the ratio of exposed surface to volume of the sensitive medium can be made very great. For pasteurizers for milk, cider and fruit-juices, which are heated whilst in circulation, this form is particularly convenient.

The danger of breakage and the mixing of the volatile liquid with the contents of the pipe is present, but with careful construction this danger should not be greater than with the use of a bulb in the usual way.

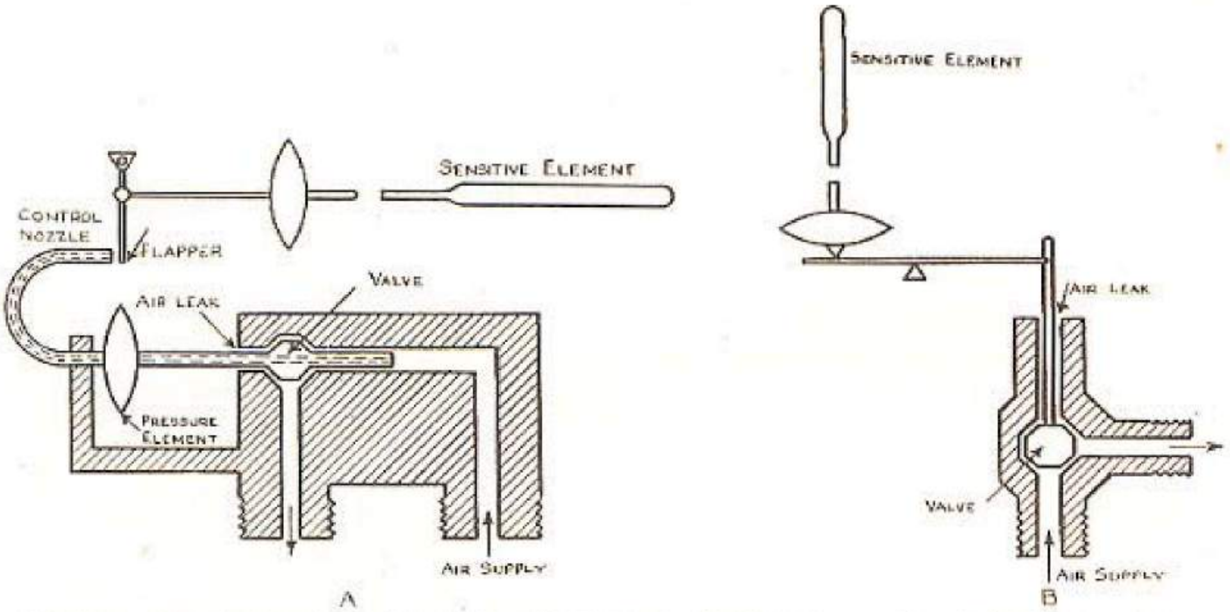

Fig. 27.—Pilot valves for air-operated controller: (A) Reverse-acting, (B) Direct-acting.

Principle of Operation of Air-, Steam- or Water-operated Controllers.—These make use of a pilot valve, controlled by the expansion of a volatile or non-volatile liquid contained in a bulb inserted in the heated space. The pilot valve then regulates the pressure of air upon the diaphragm or bellows of the main control valve. Where large valves or slides have to be operated, the pilot valve controls the direction of air, water or oil flow to a power cylinder capable of developing up to about 5,000 ft.-lb. per stroke.

The pilot valve takes one of the two forms shown in Fig. 27. In the form (A), expansion of the sensitive element, on rise of temperature, causes a flapper to close or partially close a nozzle from which air is issuing. This raises the pressure in the pressure element, causing it to expand and close the pilot valve, whereby the air-leak is opened and the air cut off from the diaphragm valve. This latter valve is so arranged that reduction of pressure causes it to close and cut off the heating medium. When the flapper uncovers the nozzle, with fall in the controlled temperature, the air-leak is closed and air pressure applied to the valve. In the form (B), movement of the expansion element controls the pilot valve directly. Rise in temperature causes air pressure to be applied to the main valve to close it.

There are a number of variations of the foregoing principle. The opposite effect in either (A) or (B) is obtained by changing the position of the pilot valve so that rising temperature affects the main valve in the reverse manner. The main valves used in conjunction with these regulators may either be direct- or reverse-acting, and are referred to in the Appendix.

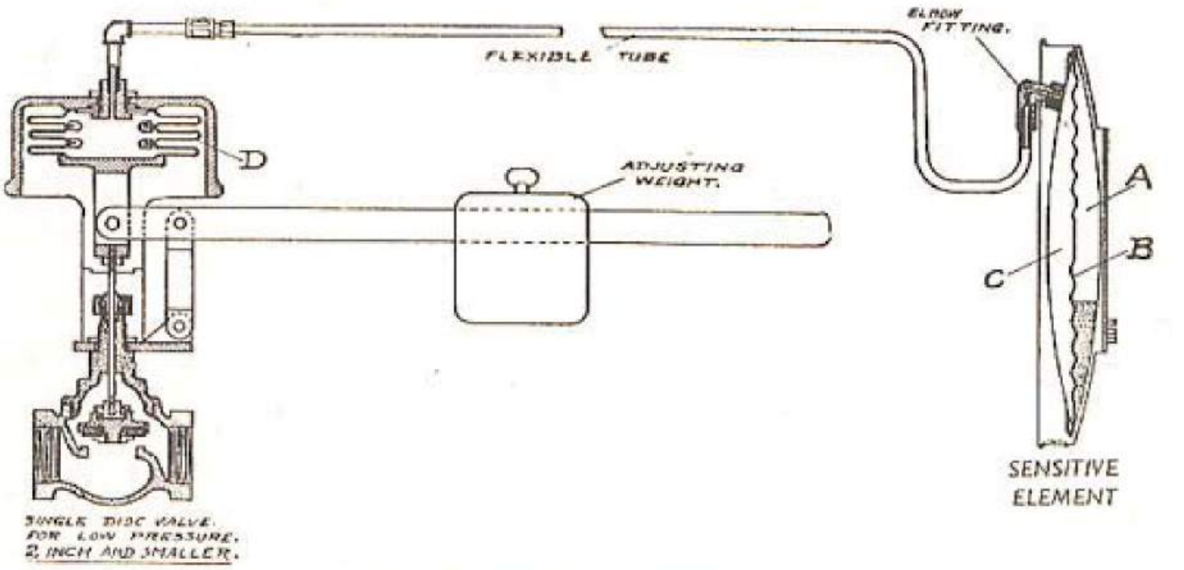

FIG. 28.—The Powers regulator.

Self-operated Types.

One of this type of regulator manufactured by the Powers Regulator Company consists (Fig. 28) of two compartments, *A* and *C*, divided by a flexible corrugated-bronze diaphragm *B*. One compartment contains the volatile liquid, the expansion of which forces the metal diaphragm back and expels air out of the rear compartment through a flexible connecting tube and into a bellows *D* operating the control valve of the heating medium. When the temperature falls, and the pressure decreases, the gas valve is opened again by means of a lever and weight. The pressure in the bellows is directly proportional to the temperature of the compartments; consequently the position of the adjusting weight on the lever will determine the temperature at which the valve will close, and the operation being gradual, the passage afforded by the valve opening is proportional to the temperature. By changing the positions of the adjusting weight, different temperatures over a 20° F. or 10° C. range are secured. Such a thermostat for house-heating purposes has a sensitive element in the form of a capsule about 12 inches in diameter and 1½ inches in depth, enclosed in an open-pattern cover fixed on the wall of the room where atmospheric temperature control is required. The flexible connecting tube may be of any length up to 75 feet, or with smaller valves 100 feet, and is usually of lead armoured with galvanized steel wire. Armoured copper tube is employed where conditions such as excessive vibration require its use. For the control of draught dampers on a heater, the valve is omitted and the bellows are enclosed in a housing with a suitable supporting flange, connection being made by means of chains between the end of the lever and the heater dampers.

The Morgan Crucible Company manufacture a thermostat which whilst strictly not being a self-operated type, does open and close contacts directly, to operate relays. This instrument is based on the principle that, for comfortable conditions in a room, the heat loss from an object at a temperature corresponding somewhat arbitrarily to that of a human being should be a constant quantity. The instrument consists essentially of a hollow blackened copper sphere about 5 inches in diameter ; this sphere, an illustration of which is given (Fig. 29), is mounted on a cylindrical sump, which is housed inside the base. The sump is filled with a volatile liquid and contains a small heating coil as well as a bellows diaphragm, the movement of which causes contacts in the circuit of the master relay controlling the heating apparatus to be opened or closed. The heating coil is loaded continuously at from 4 to 8 watts, so that the liquid is evaporated at a constant rate and rises into the sphere, where it condenses on the inner surface of the copper and drains back into the sump. The rate at which this condensation takes place, and therefore the vapour tension inside the sphere, obviously depend on the rate of heat flow through the copper walls. If this rate of flow is, say, increased, owing to a change in the conditions in the room, the temperature of the sphere will drop, the rate of condensation will increase, and the vapour tension will fall. The bellows diaphragm, one side of which is exposed to the atmosphere, will therefore expand and close the relay contacts, so that the relay will operate and the heating apparatus be switched on.

The relay (Fig. 30) consists of a vertical glass tube, from which a horizontal arm projects, carrying two contacts. A quantity of mercury, on which an iron rod floats, is sealed into the tube. The lower part of the latter is surrounded by a solenoid, one end of which is connected to the mains and the other to one of the contacts in the sump. The other contact in the sump is also connected to the mains. When these contacts are closed, the solenoid is energized, the iron rod is drawn downwards, and the level of the mercury is raised, so that some of it flows into the horizontal arm, completing the circuit between the two contacts therein. As will be seen (Fig. 31), these contacts are in the radiator circuit, so that the heating apparatus is switched on.

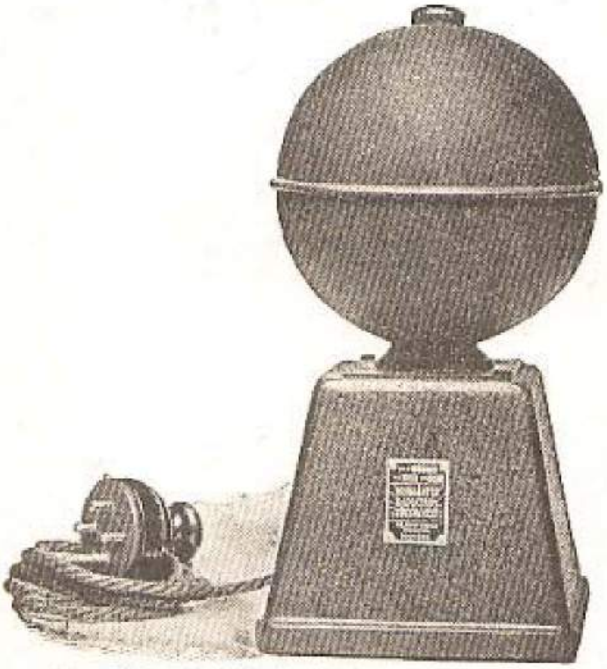

FIG. 29.—Radiation thermostat for room temperature control.

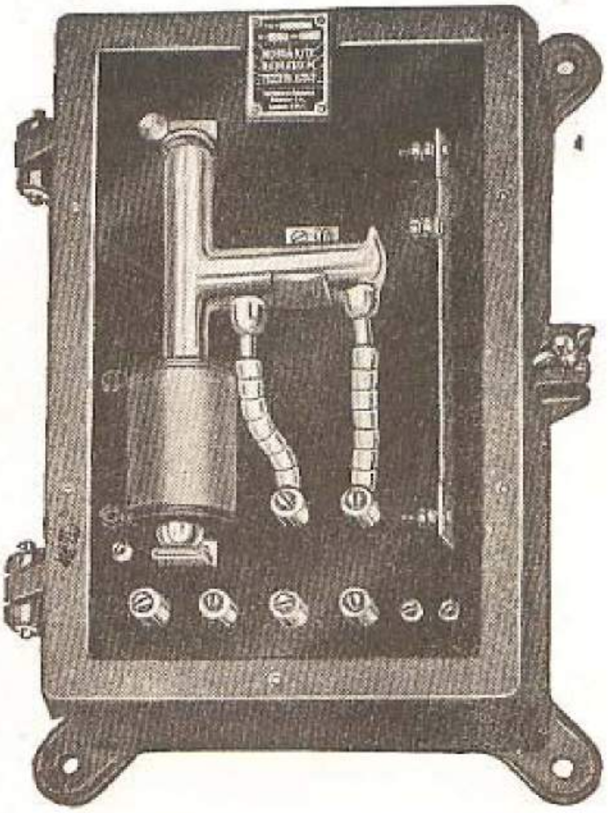

FIG. 30.—Control relay for radiation thermostat.

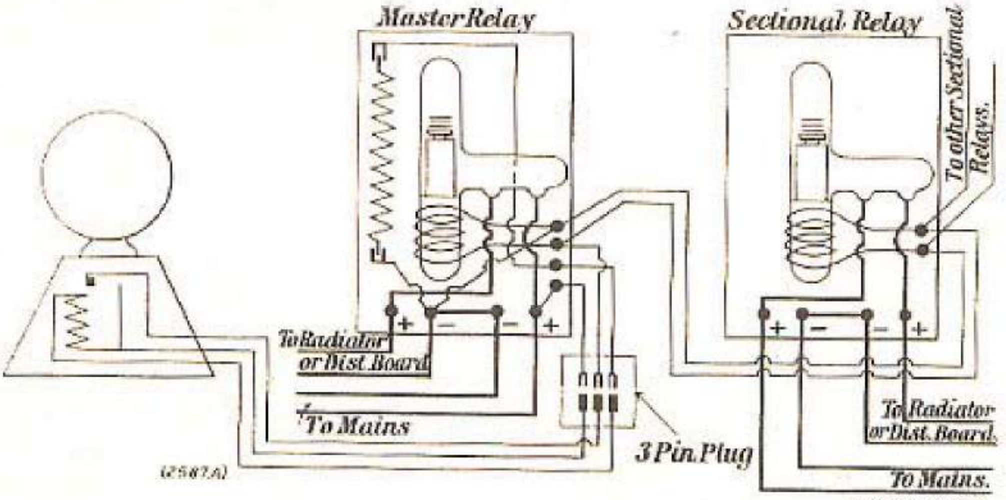

"ENGINEERING"

FIG. 31.—Diagram of connections of operating relays for radiation thermostat.

Bearing Thermostat.—It is desirable to have an automatic means of stopping an unattended machine before damage is done, in the event of its bearing becoming overheated. The sensitive element, usually a bulb containing a volatile liquid, is embedded in the bearing itself or placed in the circulating oil if this is possible. Attainment of a dangerous temperature causes a switch to be tripped. The liquid is generally contained in a brass tube and moves a piston which throws off a quick make-and-break switch. The switch is held in the off position until re-set by hand, and is normally capable of carrying power from the mains. Adjustment is usually provided for the switch to open at from 60° C. to 90° C.

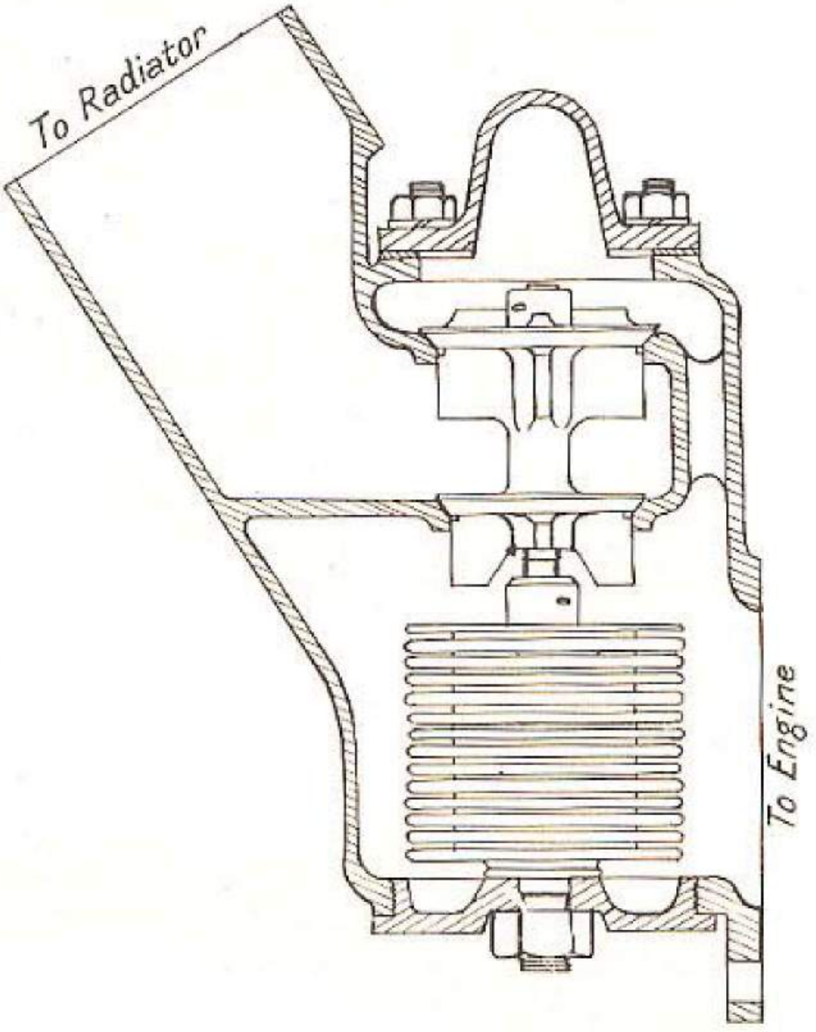

Fig. 32.—Car thermostat : bellows type.

Liquid-expansion Thermostat for Motor-car Engines.—Motor-car engines usually have their carburettors set so as to give their maximum power with the highest economy when the water-jacket temperature is about 180° F., and there is a lack of efficiency until this temperature is attained. It is desirable, therefore, to prevent the cooling of the circulating water by passage through the radiator, until this temperature has been reached. Alternatively, the thermostat may operate radiator shutters. The temperature should be maintained regardless of weather, load or road conditions.

A common form of thermostat for this purpose consists of metal bellows containing a volatile liquid. The bellows are made so as to be fully extended before the liquid is put in, but when filled and sealed up are in a state of compression, due to the internal pressure being below that of the atmosphere. The bellows are inserted in the cooling water at a point between the top of the cylinders and the radiator, and when the pre-determined temperature is reached, the liquid vaporizes and expands the bellows. To the bellows is connected a valve controlling the rate of flow of the water into the radiator. The flow of water from the cylinders to the radiator cannot commence until the water around the cylinders has attained a temperature of at least 140° F., when the expansion of the bellows opens the valve slightly. As the expansion increases with the rise in temperature, the valve continues to open proportionately until a temperature of about 170° F. is reached, when all the cooling water is in full circulation. Should the bellows be punctured accidentally they would fully expand, giving an unrestricted water flow.

This thermostat may be used in one of two ways: either to obstruct the flow of hot water from the cylinders to the radiator, or to by-pass the water from the cylinder-block back to the bottom of the radiator or pump. The first alternative is shown in Fig. 32. Guiding vanes for the valves are generally used to prevent them sticking, and a small hole of about $\frac{1}{8}$-inch diameter is drilled in each valve to prevent the formation of air-locks. The valve diameter is so chosen that, when the valve is fully open, the flow area uncovered is equal to that of the main water-pipe. In cases where this diameter cannot conveniently be made large enough, two valves in parallel are used, as illustrated in Fig. 32.

Other types of control, such as those embodying a bimetallic strip, are employed for the same purpose, and these are described in another chapter.

Air-operated Types.

The *Tycos* temperature regulator, which is of the air-operated type, is illustrated in Fig. 33 and details of the air valve are shown in Fig. 34. The sensitive bulb is connected by means of flexible capillary tubing with a small metal capsular chamber (8) (Fig. 33) within the case of the instrument. When the capsule expands sufficiently, the valve stem is raised so as to allow a free passage to the compressed air through the regulator to a diaphragm valve. This air inflates the diaphragm of the valve, causing the valve to shut off just enough heating medium to maintain the temperature at the desired point. An air-leak (5) allows the air to be exhausted from the diaphragm when the temperature falls. Adjustment for temperature is made by the rotation of an eccentric cam (7) in the form of a disc, which is interposed between the capsule and the valve stem.

Reverse-acting regulators are of a similar design to the foregoing, except that the air valve closes when the temperature rises above, and opens when it falls below, the desired value.

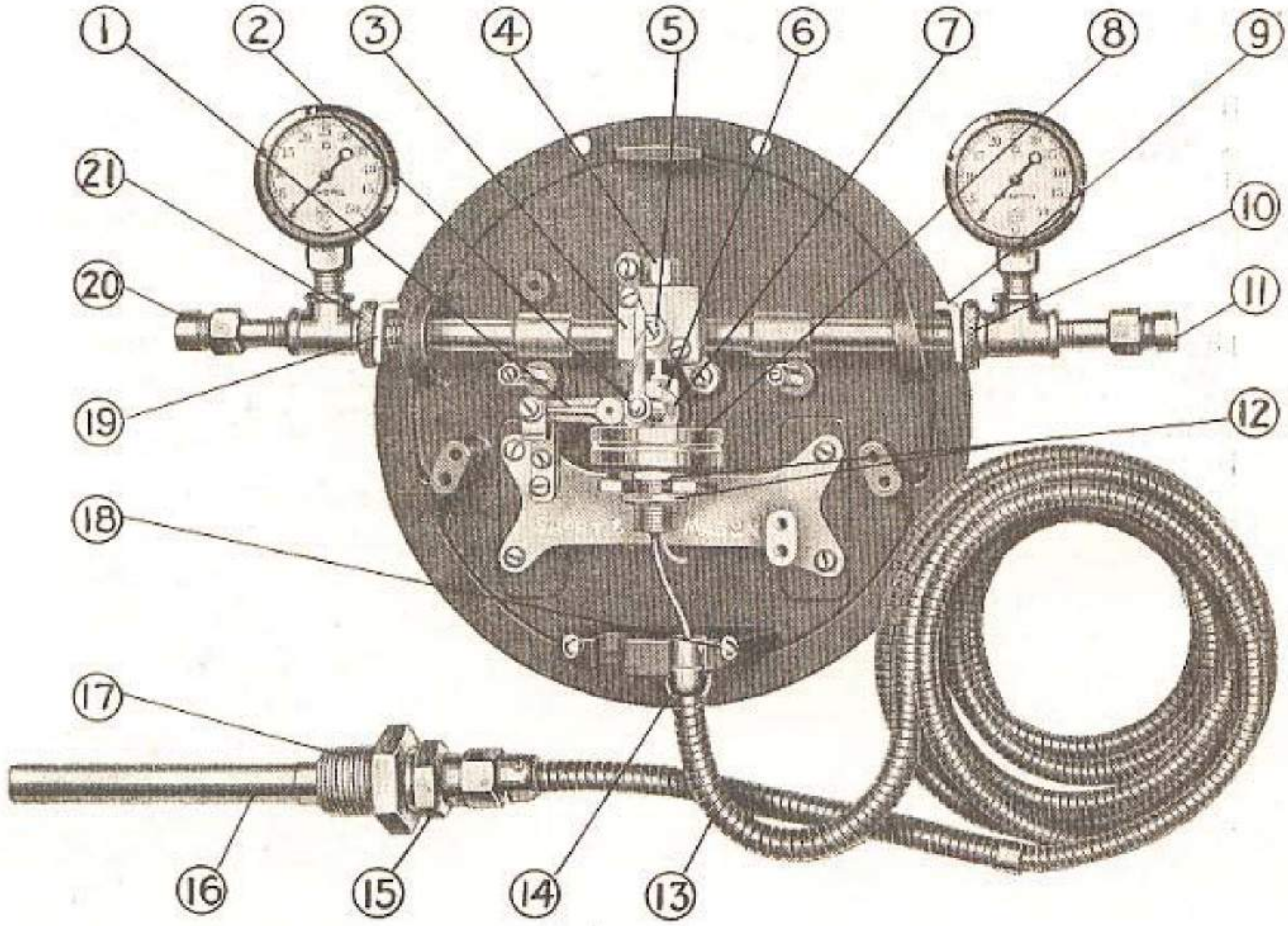

Fig. 33.—Tycos “ Singl-Duty ” air-operated temperature regulator.

(1) Rocker-arm and bracket for cam (7).
(2) Cam-adjusting key-post.
(3) Air-valve block.
(4) Air-valve cap.
(5) Adjustable air-leak.
(6) Rocker-arm stud which engages air-valve plunger.
(7) Temperature-adjusting cam.
(8) Capsular chamber.
(9) Front case clamp plate.
(10) Front case lock-nut.
(11) Air inlet (union butt).
(12) Capsular chamber lock-nut.
(13) Bronze-armoured connecting tubing.
(14) Ferrule.
(15) Swivel nut.
(16) Bulb.
(17) Union connection hub.
(18) Ferrule set-screw.
(19) Front case clamp plate.
(20) Air connection to diaphragm valve.
(21) Front case lock-nut.

For the control of two heating media—or one heating and one cooling medium—to maintain a constant temperature, one bulb is used which is divided into two compartments, each compartment being connected to its individual capsular chamber in the instrument case. Each capsule controls two separate valves. One capsule chamber is direct-acting, and regulates the valve in the steam line, while the other is reverse-acting to regulate the water-line valve. A single adjustment device controls both sides, after each side has been set separately.

The primary reason for manufacturing a control for use with two heating media—exhaust steam and live steam—is because the supply of exhaust steam is liable to fail. With this device, as soon as the temperature falls below a certain limit, due to failure of the exhaust steam supply, and it becomes necessary to resort to live steam, the regulator closes the diaphragm valve in the exhaust steam discharge line, and opens the diaphragm valve in the live steam line.

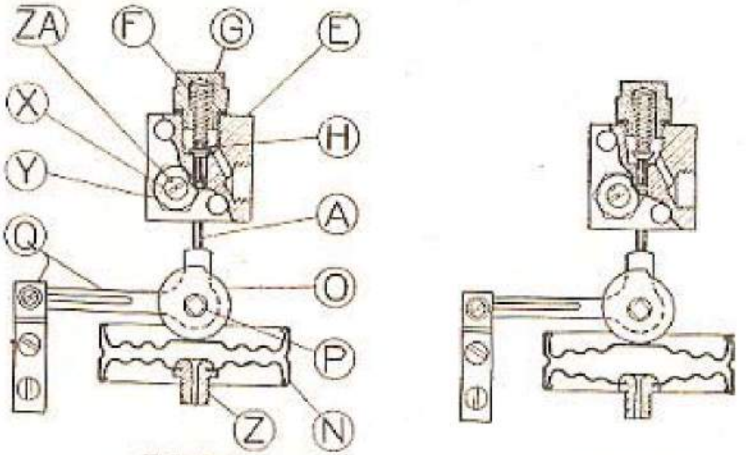

FIGURE-1

FIGURE-2

FIG. 34.—Diagram showing operation of "Singl-Duty" direct-action air-valve block.

(1) Capsular chamber in normal position and air-valve closed.
(2) Capsular chamber in inflated position and air-valve open.
(A) Lower valve plunger.
(E) Air-valve block.
(F) Valve spring.
(G) Air-valve cap.
(H) Upper valve stem.
(N) Capsular chamber.
(O) Adjusting cam.
(P) Adjusting key-post.
(Q) Rocker arm and bracket.
(X) Air-leak screw.
(Y) ,, ,, lock-nut.
(Z) Capsular chamber fitting.
(ZA) Air-leak.

Air pressure of 25 lbs. per square inch is employed with the foregoing types of instruments, but pressures as high as 40 lbs. can be used.

Variable Vane Type.—The principle of the *Bristol Free-vane Air-operated Controller* is illustrated in Fig. 35. The actuating element (1) through connection (2) rotates the shaft (3) to which the recording pen arm (not shown) is attached. A thin vane (4) is also attached to this shaft, and as the shaft rotates in response to changes in temperature, this vane passes between two nozzles (5) and (6) which are discharging opposing jets of air, and in so doing throttles the discharge of air. It is by means of this throttling that control is effected.

Air at 15-lbs. pressure is admitted at (7) and passes upward through the filter (8). Its pressure is shown on the gauge (9), and a branch leading off to the left supplies air to the orifice (10) and pilot valve (12). The object of the orifice is to restrict the flow so that only a

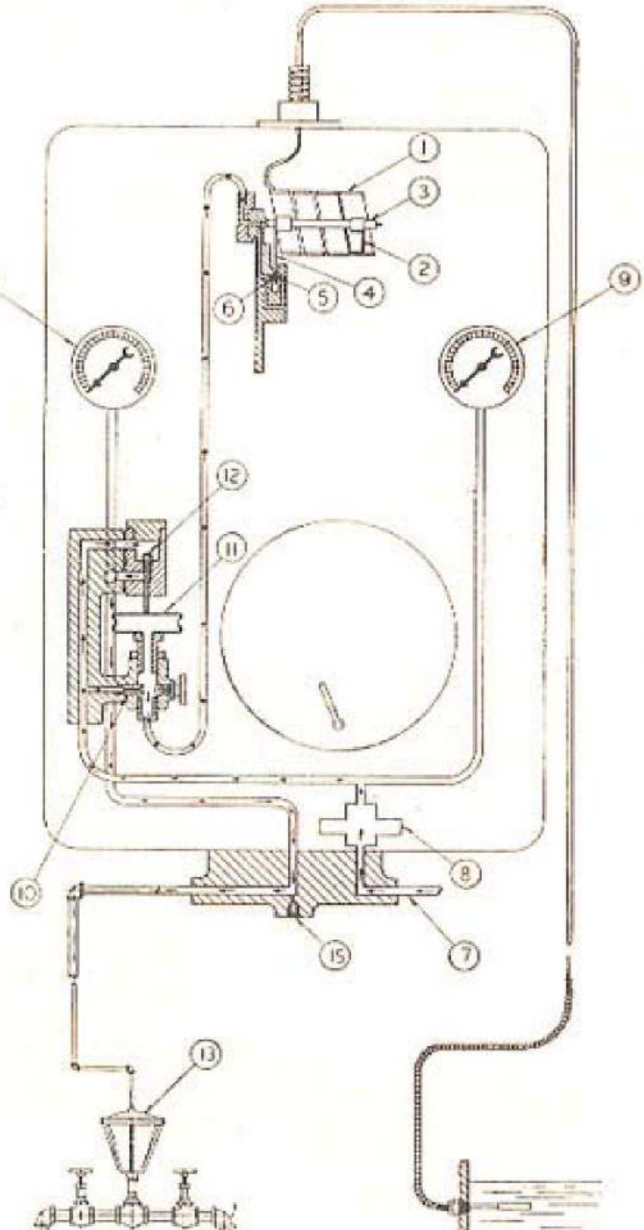

FIG. 35.—Bristol free-vane air-operated controller.

limited amount of air can pass through to the diaphragm (11) and the nozzles (5) and (6). These nozzles are so proportioned in relation to the orifice (10) that when their discharge is not throttled they permit enough air to escape so that only a slight pressure is produced in the diaphragm (11). As the edge of the vane cuts into the discharging jets of air, as already stated, the discharge from the nozzles is throttled, the amount of throttling depending upon the position of the vane. When the vane cuts entirely through the jets of air the throttling is at a maximum, and a much higher pressure is built up in the diaphragm (11). The function of the diaphragm is to operate the pilot valve (12). Full air-supply pressure is always maintained over the top of the pilot valve, and when the diaphragm opens this valve, air is allowed to flow to the diaphragm motor valve (13), the gauge (14) showing the amount of this pressure. A small amount of air is permitted to leak out through the adjustable bleeder (15). When the pilot valve passes more air than the bleeder can discharge, the pressure increases at the diaphragm motor valve. When the pilot valve passes the same amount of air as the bleeder discharges, the air pressure remains constant on the main diaphragm valve. Since the opening of the diaphragm valve depends upon the air pressure to which this valve is subjected, it follows that this opening is determined by the movement of the vane (4). The adjustable bleeder (15) enables the controller to be adjusted to the sensitivity of the process.

The two opposing nozzles (5) and (6) are separated by a distance which is approximately one-fourth the diameter of the jets. This arrangement conserves air, as the two jets discharge no more air than does a single jet. It also serves to balance the vane. The vane, being thin and flexible, assumes a position midway between the two nozzles and substantially reduces the discharge of air without coming in actual contact with either nozzle, literally being "floated" by the two jets of air. In this way friction on the vane is minimized.

The vane can readily be rotated about the shaft and locked in any position desired. This adjustment is utilized to convert a direct-acting valve into a reverse-acting valve, or vice-versa.

The throttling range of the controller can be changed in the "*Ampliset*" type by varying the linear motion of entry of the vane between the jets per unit of deflection of the measuring system. With maximum sensitivity, a relatively small deflection of the measuring system causes the vane to move a considerable distance across the face of the jet openings. Thus a small variation of the temperature will cause a large change in the setting of the control valve.

The *Kent Proportional Controller* has some interesting features. Fig. 36 illustrates diagrammatically the action of this controller. As pressure, flow and liquid controllers have a similar mechanism to the temperature-controller, the mercury-chamber float represents diagrammatically the sensitive element of the temperature-control.

Air pressure is supplied to the delivery jet B and is controlled by the pilot-valve vane A whose movements vary the pressure received by the jet B in the line P. This pressure is then transmitted to the diaphragm chamber, thus compressing the springs of the valve, which alters the flow of heating medium.

The value at which the controller is to maintain the controlled quantity is indicated by the pointer *C*, which moves over the diagram or chart concentrically with the pen *D*. A manual setting dial *E* is provided for setting the pointer.

Pivoted to the combined pointer and crank *C–G* is the differential link *H*. This link is slotted at the lower end so as to ride on the pin *J* which is fixed in *F*. Thus the centre-line lies across the pivoting centre of *F* and *G*, when the set value and the actual controlled value coincide. The connecting link *K* is attached to the differential link *H* by a shouldered pivot screw, so that for any deviation of *C* or *D* a movement is transmitted to the driving pin *Z*, which in turn moves the ratio arm *Q*, and the vane *A*.

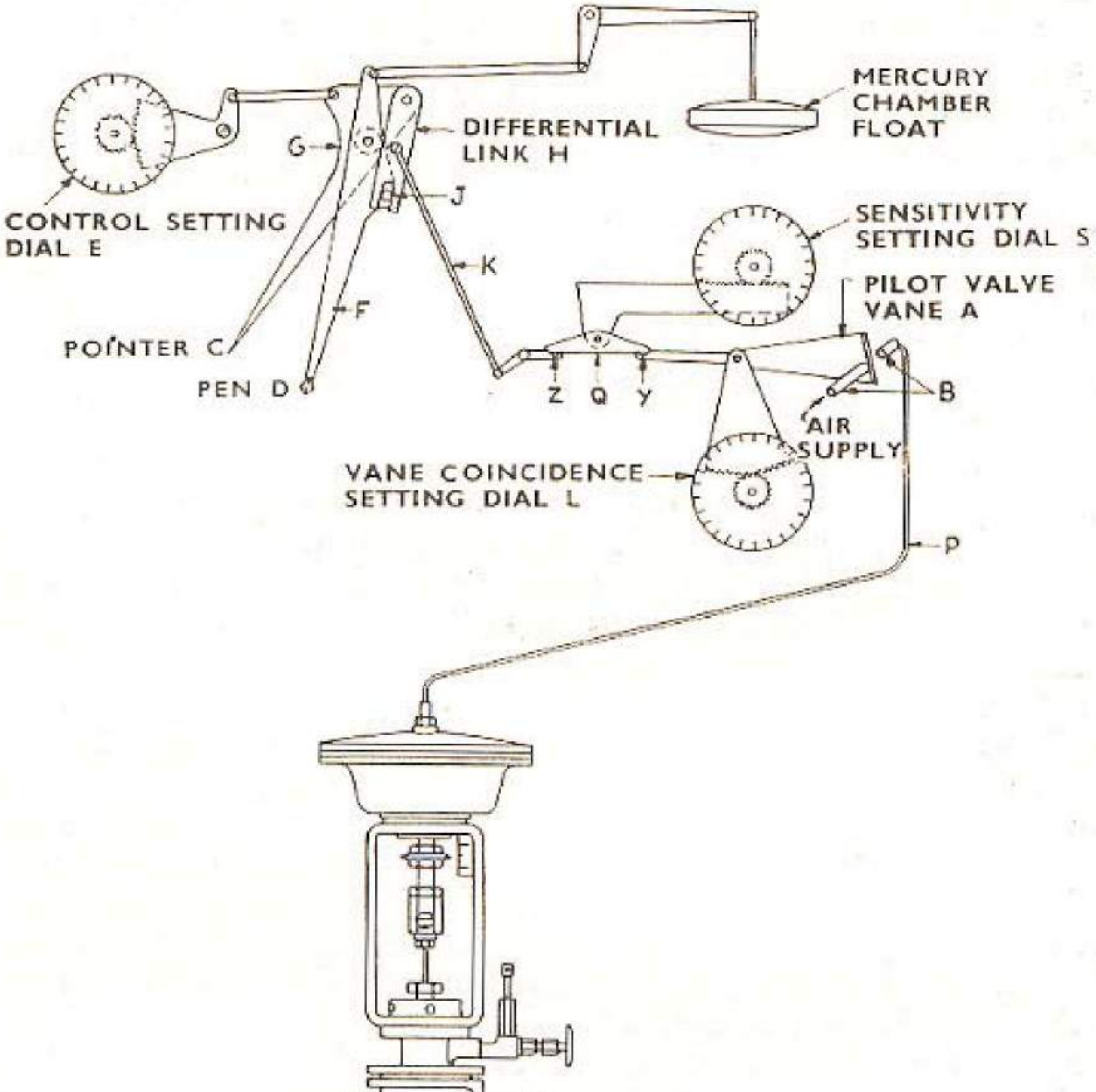

[*Geo. Kent & Co., Ltd.*

FIG. 36.—Layout of Kent Proportional Controller.

The amount of movement transmitted to the vane A is proportional to the deviation of C and D from one another, and the setting of ratio arm Q. The latter is called the "sensitivity adjustment" and is accomplished by the setting dial S, which alters the position of the fulcrum and ratio arm Q relative to the position of the pins Z and Y.

A vane coincidence arrangement with setting dial L is also shown, and this, through an eccentric bush, alters the position of the vane relative to the nozzles in a horizontal direction, thus effecting a simple adjustment to bring the pen coincident with the setting pointer.

Stabilization of Air-operated Controllers.—In order to eliminate "hunting" or "cycling," it is necessary to adjust the throttling range of the controlling instrument, or in other words its sensitivity, by way of compensation. Stabilization by varying the throttling range is insufficient in some cases, and an additional system of stabilization is needed. This usually takes the form of damping the initial movement.

A common method is to employ two air capsules in opposition, interposed between the pilot valve and the diaphragm of the control valve. These capsules are connected by a link to the orifice of the controlled air-leak, so that the orifice is moved in the required direction to counteract the first movement set up by the change in heat demand. The control is therefore stabilized by causing it to strike a balance between the two opposing tendencies and to determine a control-valve position which will supply the amount of correction required to maintain the temperature constant. As the action of this stabilizing element is always in proportion to the speed and magnitude of the change in heat demand, because it is governed by the initial velocity of the air flow through the relay system via the air-leak, good control is secured. There is little swing from the control point.

With one type of instrument, the air flow to one capsule is free and to the other restricted by the inclusion of a long length of fine-bore resistance tubing. In another, the air flow to the second capsule is controlled by an adjustable needle-valve. Other constructions are used, but the underlying principle is the same, and is that of controlling the back pressure on the pilot valve so that any new pressure applied to the fuel control-valve is gradually changed at a rate which is a direct function of the rate of change of the process temperature, bringing the temperature back on a curve which is tangential to the control-point, instead of cutting across it.

The system of stabilization described is illustrated by the diagram (Fig. 37). As the control-point is reached, the valve A commences to restrict the flow of air from the orifice B. Pressure is built up behind the orifice, causing inflation of the capsules C and D. C tends to open the pilot valve G, but D causes the orifice to move away from the valve A, thus permitting air to escape and release the pressure behind the orifice B. Meanwhile the trend of conditions needs correction, and the valve A continues to move towards the orifice *B* and repeats the above. At the same time, air is passing through the restriction *E* and inflating the capsule *F* at a slower rate than capsule *D*. Eventually *F* and *D* balance each other and the orifice is brought to its original position, the pilot valve *G* is opened, and the control valve adjusted. The action of the capsule *F* is to stabilize or damp the operation of the controller.

Re-setting controls are available which are modified forms of proportional controllers. The object is to enable the throttling zone to be reduced to a small percentage of that which is optimum for proportional control. It is accomplished by the addition of another vane linked to the principal vane, but the action of the former is delayed considerably by a needle-valve fitted in its pressure pipe. The delay can be varied to suit the amount of lag.

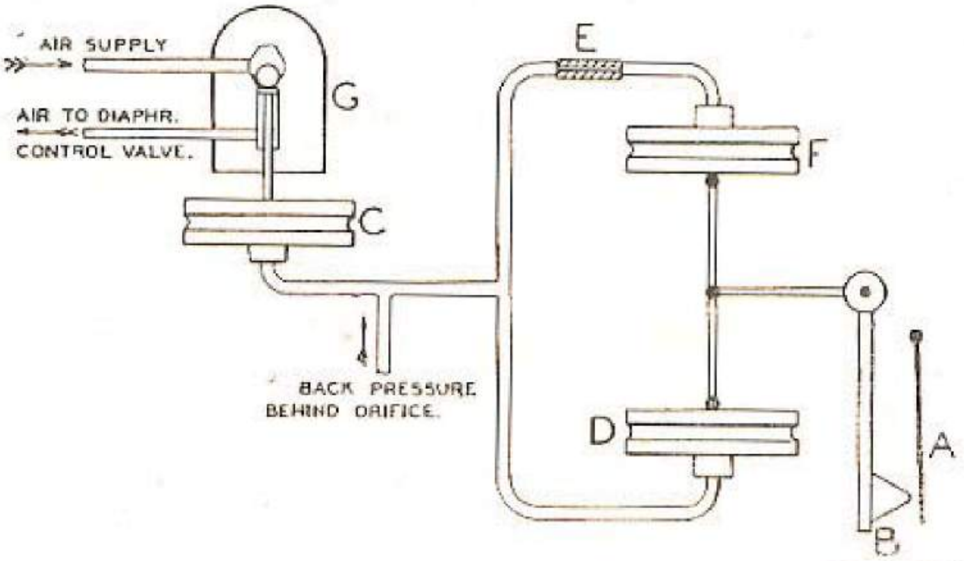

[*Electro Meters, Ltd*

FIG. 37.—Diagram showing one type of stabilizing system employed in air-operated temperature-controllers.

Fig. 38 shows the controls of the Kent re-set controller. The connecting link moves both ratio arms Q_1 and Q, which are interconnected by an adjustable link. Each vane has a sensitivity adjustment.

The diaphragm valve is equipped with two diaphragms, and operating mushrooms which are mechanically tied together, but the pressure chamber of each is quite separate, one being filled and exhausted by pilot valve A_1 through the needle-valve *F V* and known as the re-setting control, and the other by the pilot valve *A*, the proportional control. The mushroom *W*, depressed by the pressure from the re-setting pilot valve (into the chamber *T*), pushes down its spindle through the gland *U* and thus the mushroom *M* and spindle *N* which are directly connected to the valve. (The gland *U* prevents the pressure leaking upwards into chamber *X*, as the latter is in connection with the atmosphere.)

It will be appreciated that either of the mushrooms *M* or *W* can move the valve over its entire range. Normally, if proportional control only were used, pilot valve *A* would send its pressure-variations

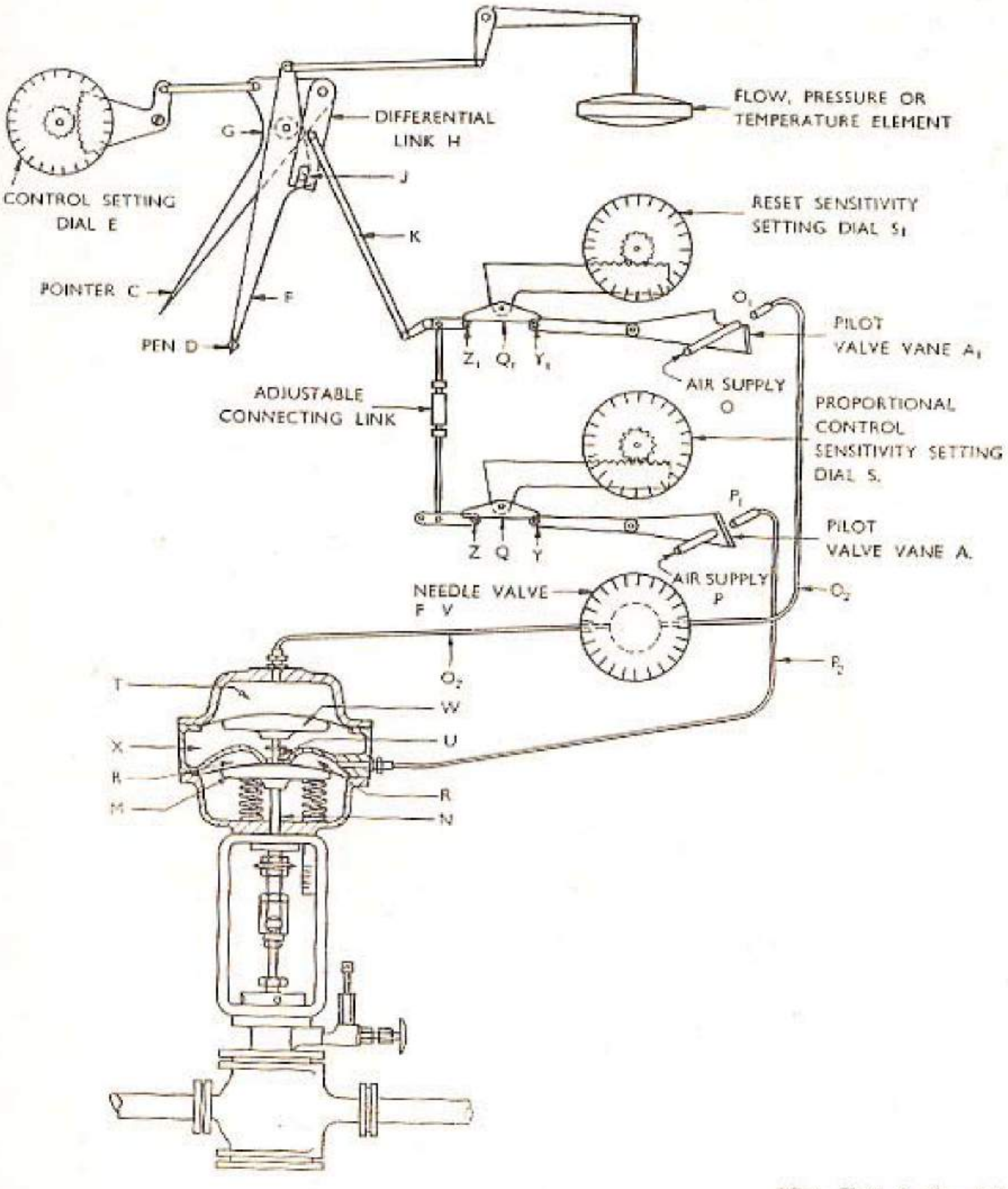

[Geo. Kent & Co., Ltd.

FIG. 38.—Layout of Kent proportional and re-set controller.

via pipe P_2 to the space *R* above mushroom *M*, thus exerting an effort on this mushroom alone.

When re-setting control is used, the needle-valve *F V* is opened slightly, which allows pressure-variations from the high-sensitivity pilot valve A_1 to be communicated to the mushroom *W* via the space *T*.

As the two pilot valves A and A_1 are tied together mechanically by means of the adjustable connecting link, it will be realized that for a small deviation a large potential pressure-change is caused by pilot-valve vane A_1 and a small one by pilot-valve vane A. Whereas A is in direct communication with mushroom M via space R, and moves it immediately, the larger effect of vane A_1 is delayed by the throttling of the needle-valve FV. If the needle-valve in line O_2 were closed completely, the controller would operate as a proportional controller, and thus the sensitivity of the pilot valve A would be determined by plant conditions. (It would be increased in sensitivity until the plant just failed to " hunt.") In some bad locations it will be appreciated that this would mean an undesirably large throttling zone.

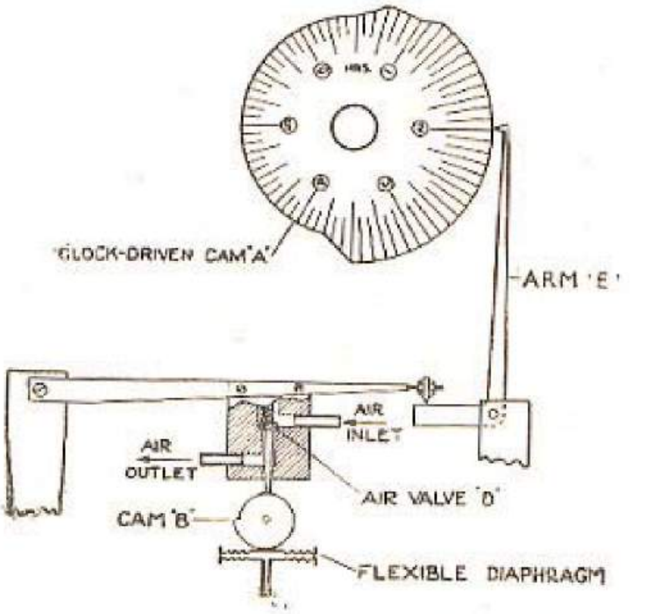

FIG. 39.—Principle of the Tycos time-temperature device, showing " two-rise " and " two-hold " cam.

Time-Temperature Control with Air-operated Controllers.—It is sometimes desirable to have automatic means of heating or cooling according to a specified time-schedule. This can be readily done with air-operated controllers by suitable continuous adjustment of the pilot valve.

The time-temperature operating device fitted on the *Tycos* instruments consists of a large cam, A (Fig. 39), driven by clockwork at a definite speed. A definite contour which has been cut on this cam to suit the requirements of the operation is followed by an arm E, which in turn raises or lowers the whole of the valve seating. The valve itself is kept in contact with the capsule by means of a spring. Movement of the seating away from the valve consequently allows more air to pass to the diaphragm valve to open it, and thus allow more heating medium to pass.

A " blow-off " device is incorporated, which consists of an auxiliary air-valve mounted on the instrument directly below the operating cams. At the expiration of the predetermined period, this valve functions, terminating the process. A stop connected to the blow-off line automatically stops the clock and enables the operator to know the exact time at which the operation terminated. If connected to the main air supply, the clock will stop should the air supply fail, and the time can be noted by the operator. The clock can be started or stopped by hand.

A " split cam " can be furnished, which can be used in a process requiring the admission of water for cooling at the end of the heating period; the cam allows the water valve to remain open until the end of the time period, when this valve will shut off automatically.

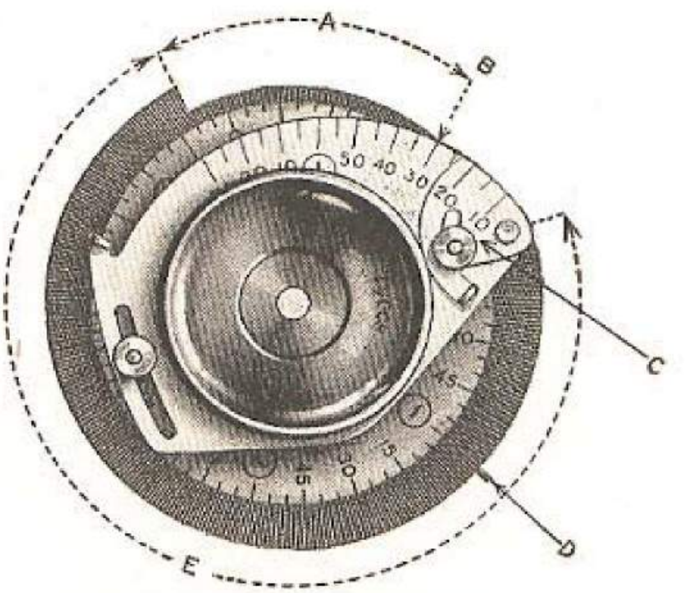

FIG. 40.—Tycos adjustable " lift-cams."

(A) Section of cam covering initial temperature-period (temperature is 100° F. in this case).
(B) Indicates setting-point of cam (30 minutes in this case). Temperature begins to rise at this point.
(C) Adjustable-rise sector regulating time of temperature-rise (112° F. in this case, difference between 100° F. and 212° F.).
(D) Blow-off arm, or timing device, regulating time of holding period (set for 1 hour in this case).
(E) Section of cam covering holding period (212° F. in this case).

Adjustable " lift-cams " (Fig. 40) are used for controlling the temperature and time of any operation requiring a variable rate of rise or fall between two temperatures. A superimposed cam on the main cam can be swung in and out so as to overlap the main cam if necessary, and deflect the tracing lever as required.

In the *Drayton* regulator of the air-operated type, the volatile liquid operates a Bourdon spiral tube. The pilot valve is operated by a system of links from this tube. Continuous temperature records are made on a flat paper-covered disc. The time-temperature device in this regulator takes the form of a celluloid disc of the required contour, superimposed on the temperature-record disc. The contour is followed by a pointer connected to the pilot valve by links. Since the temperature-indicating pointer and the control pointer have parallel motions, it is a fairly simple matter to cut out a celluloid disc of the required contour.

Unsystematic Response in Air-operated Controllers.—Systematic behaviour of the control system in a pneumatic controller requires a constant supply of clean air. Oil or water in the supply air may cause sluggish response of an open-and-shut instrument, or erratic or changed response of a throttling instrument, even if operation does not cease entirely. Each instrument should be provided with its own individual air-filter unit. In addition, however, it will often be necessary to provide large separator tanks on the air-supply headers. In extreme cases, float-actuated drain-valves may be needed to avoid flooding of the system. Compressor after-coolers are always a help. A proportional instrument usually requires not only clean air but air at constant pressure, so that the instrument need not continually correct for erroneous valve-motions resulting from fluctuations of the air supply. However, this requirement is easily met by providing each controller with its own individual air-pressure reducing valve. This is a desirable feature, both to promote reliability through freedom from group failure of several instruments on a common valve, and to reduce installation costs by bringing high-pressure supply air in small-bore copper tubing instead of low-pressure air in large-bore pipe.

CHAPTER VIII

THERMOSTATS USING BOILING LIQUIDS.

A CONVENIENT laboratory method of maintaining the temperature of an object constant at temperatures in the range from 0° C. to about 400° C. is to immerse it in the vapour of a boiling liquid, or to suspend it in a double-walled vessel, between the walls of which the vapour circulates. Yet another method is to suspend a tube, or number of tubes, from the cover of the vessel containing the boiling liquid, and place the objects to be maintained at a constant temperature in these tubes. Steam or sulphur vapour [1, 2] are often employed for this purpose, giving temperatures of 100° and 444·6° C. respectively under normal barometric pressure. Other liquids and materials which are solid at room temperature but melt at convenient temperatures for the particular purpose may, of course, be used. Most of the bath liquids mentioned in Chapter II may be used in this connection, and the restrictions mentioned there will apply here also.

The method provides a simple means of maintaining a constant uniform temperature in a comparatively large volume.

Care must be taken, if closed-ended tubes are suspended in the vapour to provide the uniform temperature-space, that the distance between the lower ends of these tubes and the surface of the boiling liquid is sufficiently great to prevent splashing of the liquid on them ; otherwise their temperature will be affected. It is also beneficial to provide the tubes with radiation shields in order to prevent loss of heat by radiation from them to the cooler walls of the container. These shields may take the form of metallic tubes concentric with, and larger than, the main tubes, and drawn in at the top end to fit the main tubes.

To avoid superheating the vapour when external heating is applied, the heat should not be applied too close to the surface of the liquid ; and also, for a similar reason, a poor conductor should be used for the material of the container. Such materials as silica, pyrex, or other hard glass are suitable. Great care has to be taken to avoid fracture on reheating the solidified contents of such containers. By the use of an electric heating coil completely immersed in the solid, this trouble can be avoided. The leads can be sealed in the walls of the container, preferably below the level of the solid, to obviate the possibility of superheating the vapour. The container can, with this method of heating, be adequately lagged. Loss of vapour is minimized by using a condenser, which, for most cases, need only consist of a long open-ended tube in the top of the vessel.

On the other hand, constancy of temperature for long periods of time cannot be maintained satisfactorily unless precautions are take to obviate the effect of variations of atmospheric pressure, for the boiling-point of a liquid may change by several degrees due to this cause. For accurate work, such variations can be eliminated by sealing the bath in an air-tight manner, and compensating for changes from atmospheric pressure by the addition or removal of small quantities of air as required. This arrangement gives a high degree of constancy, and no appreciable deviations can be detected with a sensitive thermometer.

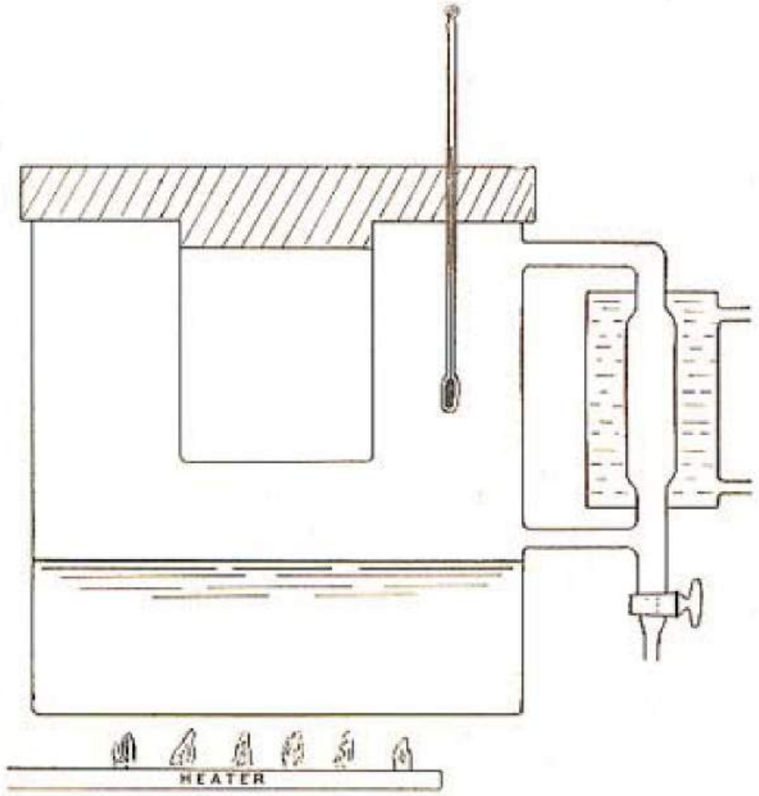

Fig. 41.—Arrangement for boiling-liquid thermostat.

Using commercial petroleum, or a similar liquid containing a number of constituents of different boiling-points, it is possible to arrange that any temperature within a limited range can be maintained. With petroleum the range is about 40° C. to 75° C.

In boiling a mixture of liquids, the concentration of the vapour is different from that of the liquid, and if the vapour is allowed to escape, the boiling-point will rise continuously to a certain limit. When the required boiling-point is reached, the system may be sealed to maintain the concentration at a constant value.

One form of apparatus for this purpose is illustrated in Fig. 41. It consists of a double-walled vessel, the space between the two walls containing the liquid and its vapour. The object to be kept at a constant temperature is contained in the inner vessel, the upper end of which is well insulated to prevent the effects of external temperature-differences. For greater simplicity, this double-walled vessel may be replaced by a vessel in which the object is directly suspended in the vapour, providing that the object is not attacked by the vapour and also that its frequent removal and replacement is not necessary. In either case the liquid is boiled and the vapour passes into the condenser, whence the liquid formed flows away through the tap and is collected in a convenient vessel. When the desired temperature is attained, as indicated by a thermometer immersed in the vapour, the tap is closed and the condensate thereafter returned to the vessel, thus keeping the concentration constant, and giving a liquid with a constant boiling-point. The condenser may be stopped if desired.

The same result, but with greater difficulty in securing a selection of temperatures when using the same liquid, may be attained by increasing the pressure on the liquid and so raising the boiling-point.

References to Chapter VIII.

(1) Niven, *Can. J. Research*, 1936, **14**, 1.

(2) Beattie, Benedict and Blaisdell, *Proc. Am. Acad. Arts and Sciences*, 1937, **71**, 327.

CHAPTER IX

THERMOSTATS USING THE EXPANSION OF SOLIDS.

THE expansion of solid materials with rise in temperature may, broadly speaking, be used in two ways to control temperatures. The property may be made use of either in the simple form of direct expansion, where the material has relatively free movement to make and break the electrical control circuit, or it may be employed in a differential manner in the form of bimetallic strips. This latter arrangement will be described in a later chapter.

Thermostats depending on the expansion of solid materials are very reliable, providing the expansion material is suitably selected and treated. The fact that linear expansion is usually a straight-line function of temperature is also an advantage, since the accuracy of regulation is not diminished at high temperatures. As the amount of expansion of the material is small, the control mechanism has to be sufficiently delicate to respond to small movements. This may be arranged by the use of a system of levers to magnify the movements, or the expanding material may operate a pilot valve controlling a compressed-air or steam supply. In some instances a combination of both methods is utilized.

One simple form of thermostat of this type consists of a hollow metal block in which a hole is drilled to take a porcelain rod. The movement of the porcelain rod in or out of the block with change of temperature causes electrical contacts to be made or broken through the agency of levers. The metal block may be made of aluminium for temperatures up to 500 °C. ; aluminium bronze for temperatures up to 700° C. ; and 18–8 chromium-nickel steel for temperatures up to 1000° C. The block may be cylindrical with a one-inch wall between the constant-temperature zone and the heating element. The diameter of the block should be roughly the diameter of the constant-temperature zone plus 2 inches ; the length should be the length of the constant-temperature zone plus 12 inches. Bushings may be used inside the block to reduce the heating space.

The more usual form of instrument consists of a tube of metal of relatively high expansion, such as brass, in which is contained a rod with a negligible or very small coefficient of expansion. This rod transmits the movements of the tube to a switch or valve arrangement. This arrangement results in a rapid response of the sensitive element to fluctuations in temperature, which would not be the case if, alternatively, the sensitive element were contained in a non-expanding tube, as is sometimes found.

Simple Form of Solid-expansion Thermostat.—In Fig. 42, *A* is a brass tube immersed in the liquid under temperature-control. One end of a nickel steel rod *B* is held by a spring *S* against the end of the tube, while the other end *E* is free to press upon or recede from the conical valve seating *F*, thus controlling the passage of water or compressed air from the pipe *H* to *D* (connected to the diaphragm chamber of the main control-valve). With rise in temperature, the rod is withdrawn from the valve *F* by the expansion of the tube *A*, allowing more water or air to pass through to the diaphragm, thus increasing the pressure and causing the main valve to close.

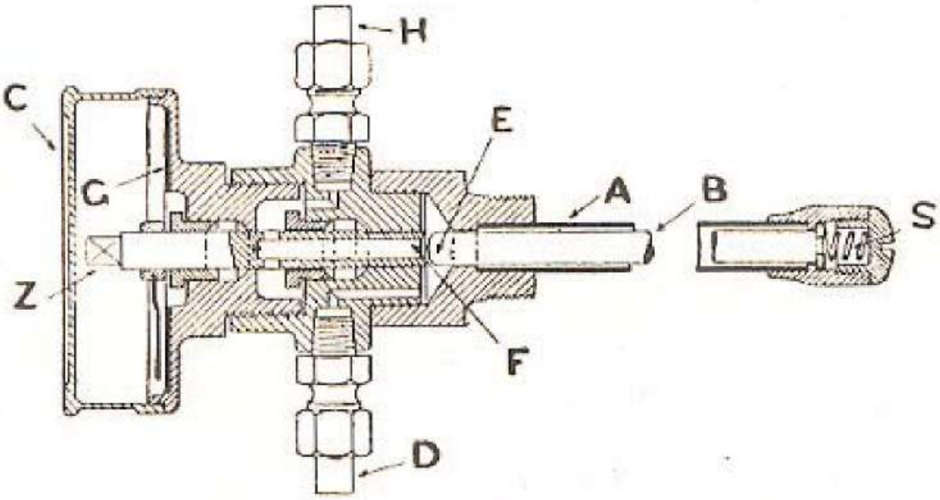

FIG. 42.—Thermostat depending on the expansion of solid material.

The *Chevenard*[1] *dilatometer* can be modified to act as a thermostat. The expansion in the heating furnace or space of a bar of nickel-chromium alloy is magnified by a series of levers, which move a pair of prongs into one or both of two mercury cups. One prong enters the mercury slightly before the other and energizes a relay which puts a certain amount of resistance into the furnace circuit. If the temperature continues to rise, the second prong enters the mercury in the other cup, and through another relay more resistance is put into the furnace circuit.

Chevenard has also designed an apparatus (Fig. 43) in which the extension of a length of wire with increase in temperature (due to increase in the supply current which passes through it) causes a resistance to be put into the circuit. A part of the supply current is passed through a length of nickel-chromium steel wire contained in a vertical Pyrex glass tube. The instrument is adjusted to be in equilibrium at the required temperature, and any fluctuation in the current supply causes a change in the temperature of the wire, and consequently in its length. This change in length is transmitted to a long needle which, through a linkage, moves a lever with prongs

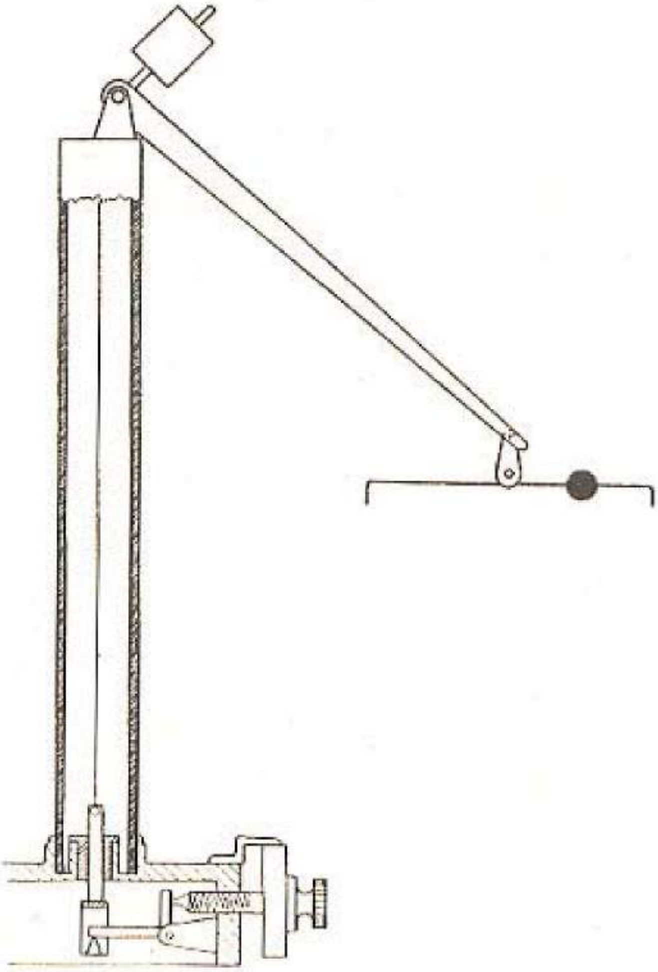

FIG. 43.—Chevenard regulator.

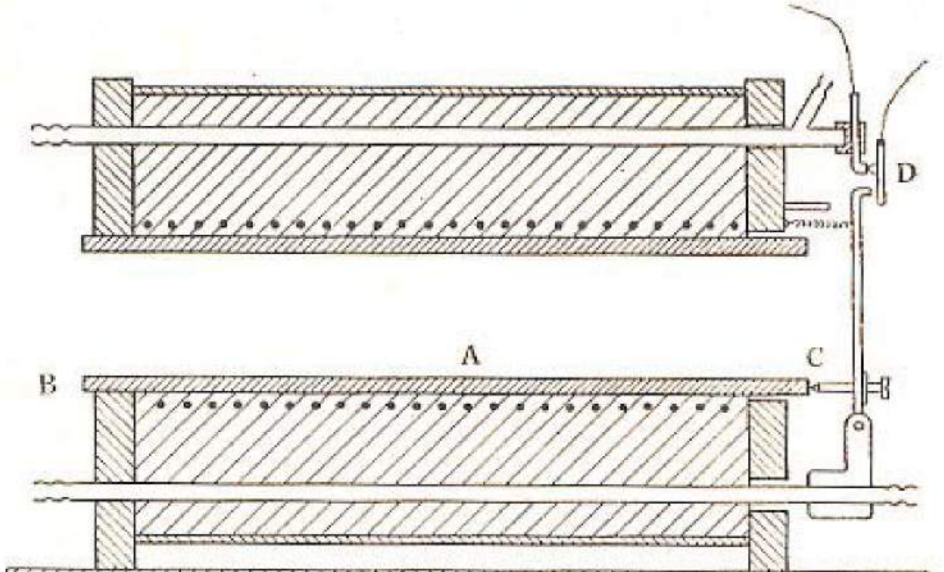

FIG. 44.—Use of the expansion of a furnace tube to control temperature.

dipping into mercury contacts. Fluctuations in atmospheric temperature are compensated for by making the link lever bimetallic, so that as it bends with change of temperature its point of contact with the needle is proportionately affected.

Expansion of the Furnace Tube.—It is possible to use the furnace tube or core itself as the expanding medium, and this results in a rapid response to temperature changes. The method has been successfully applied to the regulation of furnaces used in laboratories. The tube can be of iron, nickel or chrome-nickel, according to the required temperatures, and is fixed securely at one end in a clamp, whilst the other end is free to expand and operate a switch through a system of levers. Fig. 44 illustrates diagrammatically the principle of such a form of regulator, in which one end B of the tube A is fixed in a support, the other end C bearing against a lever which operates a switch D. The supports for the lever are water-cooled to prevent expansion.

The " Arca " Regulator.—The variation in length with temperature of a strip of ebonite is made use of in the " Arca " regulator. This strip of ebonite controls a special form of relay, which, together with the strip, is mounted in the chamber to be regulated. Gas or other valves may be operated by means of a power cylinder. The principle of the apparatus may be understood by reference to Fig. 45; this figure illustrates diagrammatically the control of steam pressure, but the general principle is the same. Increase or decrease of temperature causes a long ebonite strip connected through a spring to the lever l to move this lever further from or nearer to the jet m, and so control the rate of flow of water from the nozzle of the jet to the water-pipe. The strip is directly connected with the lever l instead of the bellows k. Restriction of the flow of water causes a rise in pressure in the pipe h and in the space beneath the flexible diaphragm n in the pilot valve b, causing the latter to rise and open suitable ports to permit the supply of water to flow into the power cylinder c as well as through the pipe h to the jet. As pressure water is supplied to the upper part of the cylinder c the piston falls, and pulling down the chain, increases the opening of the gas-supply valve. If the temperature rises too high in the chamber, the lever moves further away from the nozzle m, with the result that the jet flows more freely, and pressure falls in the valve chamber b. The spring above the diaphragm forces the valve down, so that through suitable ports the operating cylinder c is put into communication with the waste pipe and the piston moves the gas valve correspondingly. In practice the relay a and pilot valve b are made in one unit.

It will be realized that the working principle of this regulator is, in effect, similar to that operated by the expansion of a liquid through a pilot valve controlling air pressure, as described in Chapter VII.

A number of other physical properties may be controlled by a slight modification of the regulator. To apply the regulator to electrical work, the movement of the jet lever is controlled by a relay. The position of the armature of this relay is dependent on the voltage across, or the current in, the apparatus to which the regulator is connected. The regulator has been applied to control the position of the electrodes in an electric furnace. The electrodes are moved by hydraulic cylinders controlled by the regulator.

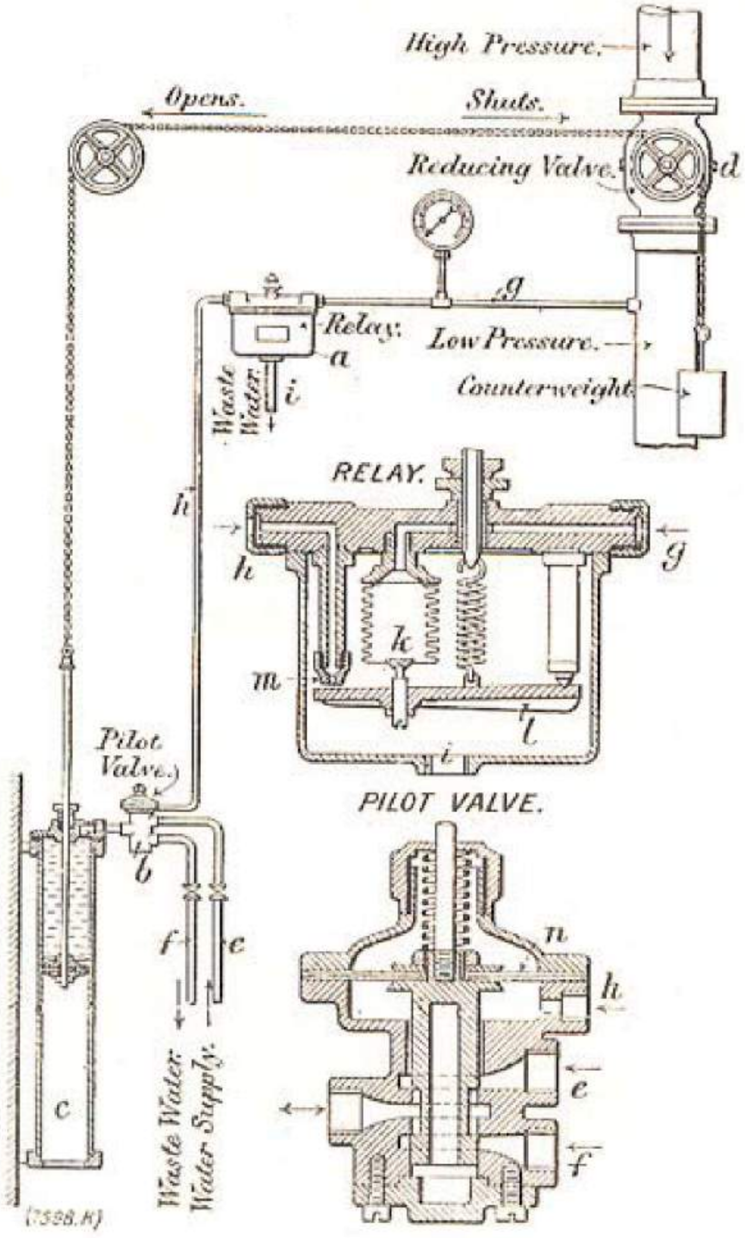

FIG. 45.—Principle of "Arca" regulator.

Reference to Chapter IX.

Chevenard, *Rev. de Mét.*, No. 8, August, 1931, 453-468.

CHAPTER X

BIMETALLIC-STRIP REGULATORS.

THE expansion of metals with temperature is made use of in a special way in thermostatic bimetals. Two metals, or more generally two alloys, of widely different coefficients of thermal expansion are firmly bonded together over their surface of contact by brazing or welding. Change of shape will occur when the temperature changes, and this change of shape, magnified if necessary, can be utilized for temperature-control purposes. Thermostats of this form, depending on the materials used, can be used up to a temperature of about 550° C. They are simple, fairly robust and reliable if adequate care is taken in their manufacture and use. For these reasons such thermostats are very popular for many industrial and domestic heating appliances.

Choice of Components for Bimetallic Strip.—The difference in the coefficients of expansion of the two components is one of the prime considerations in the selection of these components. The expansion of alloys, particularly those with low coefficients, does not always increase regularly with temperature ; abrupt changes in the direction of the expansion-temperature curve often being found, with a large increase in the expansion at higher temperatures, so that the element having the lower coefficient must be suitably selected with regard to the required working temperatures.

Materials for the high-expansion component, in addition to having a high coefficient of expansion, should be easily brazed or welded, should develop high elastic properties as a result of cold-working, and should have good heat-resisting properties.

A stable zero position is largely dependent upon the strength and elasticity of the components. At the junction of the two components on heating there will be tensile forces in the higher-expanding material and compressive forces in the lower. If the strengths are widely different, there is a possibility of exceeding the elastic limit of the softer material during heating and cooling, so that the bimetal strip does not regain its original shape on cooling. It is therefore advisable to combine components of similar strengths, and, if possible, of equal and great elasticity.

A further point in this connection is that in addition to internal stresses, the bimetal may be subject to stresses due to restraints, loads, etc., which may affect its performance if these stresses exceed the elastic limits of the materials at high temperatures.

Since the accuracy of a bimetallic strip depends principally on the elastic properties of the combination, it is therefore essential to use the materials in a state hardened by cold-rolling and carefully heat-treated to obtain the highest possible strength and elasticity. Subsequent treatment which will affect these properties adversely should be avoided. Strains resulting from manufacture, which remain in the combination, should be removed by heating to about 50° C. above the intended working temperature and slowly cooling.

For the element of low coefficient of expansion, Invar (36 per cent. nickel, 0·1 per cent. carbon, 0·5 per cent. or less of manganese and the remainder mainly iron), is commonly employed. This material may be used up to temperatures of about 120° C. A nickel content of 40 per cent. is used up to 230° C., 42 per cent. to 340° C. and 46 per cent. for temperatures up to about 440° C. For temperatures higher than these values the thermal expansion is comparatively large, and the difference in expansion between the two components of the bimetallic strip diminishes, thus rendering the curvature so slight as to be of no practical use. One point of importance may be mentioned here. Invar, upon heating, expands initially with a coefficient of 1×10^{-6}, about equivalent to that of iron or nickel, and then after the lapse of a few minutes at the same temperature, contracts to show a normal coefficient of expansion of about $0{\cdot}4 \times 10^{-6}$. Consequently, in using Invar under conditions where rapid rates of heating or cooling are involved, this temperature-time hysteresis effect may influence the deflection of bimetals by an appreciable amount. As for the properties of Invar, it is very strong and ductile. It is generally ferromagnetic, but becomes paramagnetic in the region of 165° C. Above 200° C. its expansion is nearly that of steel.

With the small-expansion element Invar, the large-expansion elements sometimes used are Constantan (nickel 45 per cent., copper 55 per cent.) or Monel metal (nickel 65 per cent., copper 30 per cent., iron 5 per cent., manganese 4 per cent.), and for certain purposes iron-nickel-molybdenum alloy (nickel 22-27 per cent., molybdenum 5 per cent., remainder iron). The deflection constant when using Monel metal, however, is rather low. These combinations are suitable for temperatures up to about 180° C. For higher temperature-ranges up to 400° C. a nickel steel (42 per cent. nickel) as the low-expansion component with nickel-constantan as the high are employed; while for even higher temperatures, such as 500° C., a nickel steel (42 per cent. nickel) is used with an alloy of iron 68 per cent., nickel 27 per cent., and molybdenum 5 per cent. Recent developments have resulted in the use of nickel-chromium alloys containing from 18 to 20 per cent. nickel and from 3 to 11 per cent. chromium.

The expansion of some alloys changes fairly rapidly over a certain temperature-range—in some instances being low up to a certain temperature, then increasing rapidly and thereafter falling off again. This peculiarity can be applied usefully for control at a fixed working temperature which is within the maximum expansion range of the chosen alloy. This minimizes excessive stress taking place at the adjoining surface of the two components.

A combination of 42 per cent. nickel and 58 per cent. iron with 42 per cent. nickel, 53 per cent. iron, and 5 per cent. molybdenum has slight curvature up to about 150° C., then increases rapidly between 150° and 300° C., whilst above 400° C. further increase in curvature is very slight. The useful working range therefore lies between 150° C. and 300° C. The useful working range of 42 per cent. nickel and 58 per cent. iron with Invar lies between 250° C. and 350° C. Below 250° C. the strip curves in the opposite direction to that above 250° C.

In selecting a combination of metals, preference should be given to that which gives the greatest change in curvature near the operating temperature, rather than to one which has the greatest total curvature up to that temperature.

A fact which must be borne in mind when choosing materials for components of a bimetal which is to be heated by conduction, is that Invar and most of the high-temperature bimetal components, such as chromium-nickel steels, are poor conductors of heat.

Dimensions of Bimetal.—The dimensions of a bimetallic strip will have a bearing on the extent of curvature and force exerted by the free end. The amount of bending will increase as the strip becomes thinner, but the force which the free end of the strip is able to exert is proportional to the third power of the thickness of the strip. The force, consequently, decreases more rapidly than the curvature increases with thinness; it must, however, be sufficient to operate a mechanism or to open or close a contact with certainty. A number of thin bimetallic strips clamped at one end are sometimes used to provide sufficient force.

Increased length and decreased thickness of a strip renders it sensitive to shock and other mechanical effects, and causes its action to be uncertain. A small movement of the free end is usually sufficient, particularly if the current passing is sufficiently small to avoid arcing at the contacts. The deflection of the free end of a bimetallic strip is proportional to the square of the length, when the deflection of the free end is relatively small in comparison with the length of the strip. For a definite thickness, the force exerted by the free end is inversely proportional to the cube of the length of the strip; with a strip of constant length it is directly proportional to the cube of the thickness. Thus the force at the free end of a bimetallic strip remains constant if the length is increased in the same proportion as the thickness, but the resulting deflection becomes proportionately greater. The amount of deflection can therefore be increased, and the force available for making and breaking contact kept the same, by increasing the length or decreasing the thickness, if at the same time the thickness is proportionately increased or the width increased proportionately to the third power respectively. Increasing the width does not decrease the amount of deflection. The radius of the bend should be at least five to eight times the thickness of the strip.

It is possible to arrive at the characteristics of a bimetal mathematically,[1-5] but the derived formulæ are rather complicated and the calculations do not always give accurate results. Nevertheless, the approximate figures obtained serve as a guide. In the formulæ obtained by Timoshenko[1] it is assumed that the coefficients of expansion of the two elements remain constant during heating, that the friction at the supports is so small that it can be neglected, and that the width of the strip is very small. The curvature of such a strip is given by the equation—

$$\frac{1}{s} = \frac{6\,(\alpha_2 - \alpha_1)\,(t - t_0)\,(1 + m)^2}{h\,[3\,(1 + m)^2 + (1 + mn)\,(m^2 + 1/mn)]},$$

where s = radius of curvature of strip,
α_1 and α_2 = coefficients of expansion of the two metals,
h = thickness of bimetal strip,
$m = \frac{a_1}{a_2}$ = ratio of thicknesses of the component strips, and
$n = \frac{E_1}{E_2}$ = ,, ,, moduli of elasticity,

t_0 and t being initial and final temperatures of the strip.

If the thicknesses of both metals are equal,

$$a_1 = a_2 \text{ and therefore } m = 1.$$

Then

$$\frac{1}{s} = \frac{24\,(\alpha_2 - \alpha_1)\,(t - t_0)}{h\,(14 + n + 1/n)}.$$

Again, if $\frac{E_1}{E_2}$, that is n, = 1,

then

$$\frac{1}{s} = \frac{3}{2}\,\frac{(\alpha_2 - \alpha_1)\,(t - t_0)}{h}.$$

The equation for the deflection of the strip is given by

$$\delta = \frac{l^2}{8\,s},$$

where l is the length of the strip and s the value obtained from one of the foregoing equations.

For use with these equations it may be stated that the brass-invar type of bimetal has a modulus of elasticity of approximately 17,500,000 lb. per square inch, and most of the medium and high-temperature bimetals have moduli of elasticity of about 25,000,000 lb. per square inch at room temperature. These values are lowered by 10 to 20 per cent. at elevated temperatures.

Instead of the customary gradual bending with increase of temperature, a sudden buckling of the composite strip at the required temperature is sometimes utilized. For this purpose the two ends are fixed, or in the case of a composite disc, the circumference is held rigidly in a frame. The equation given by Timoshenko for such a strip, assuming the same conditions as before, and that the strip is so bent that the more expansible element is on the concave side, is—

$$t - t_0 = \frac{1 + 6\,\delta_0{}^2\left(\frac{1}{3} - \frac{1}{9}\,\frac{h^2}{\delta_0{}^2}\right)^{\frac{3}{2}}}{\frac{3}{16}\,\frac{l^2}{h\,\delta_0}\,(\alpha_2 - \alpha_1)},$$

where δ_0 = initial deflection of strip,
h = thickness of strip,
l = length of strip,
t_0 = initial temperature of strip, and
t = temperature at which sudden buckling occurs.

The temperature (t_1) of backward buckling on cooling is given by

$$t_1 - t_0 = \frac{1 - i}{1 + i}\,(t - t_0),$$

where

$$i = 2\,\alpha\,(\tfrac{1}{3} - \tfrac{1}{3}\,\alpha)^{\frac{3}{2}}.$$

Weber [2] suggests a somewhat different equation for the bending of straight strips. With one end of the strip clamped, the deflection *dS* of the free end is stated to be related to the temperature by the equation—

$$\frac{dS}{dt} = \frac{4\,L^2\,R\,\alpha^1}{5\,\delta\,\theta},$$

where L = effective length of bimetal ;
α^1 = difference between the two linear-expansion coefficients ;
$\delta = \dfrac{d_1 + d_2}{2}$ = the average of the two thicknesses ;
$R = \left(1 + \dfrac{\sin^2\varphi}{\varphi^2} - \dfrac{2\sin\varphi\cos\varphi}{\varphi}\right)^{\frac{1}{2}}$;
θ = central angle of arc ; and
$\varphi = \dfrac{\theta}{2}$.

$\dfrac{dS}{dt}$ is greatest for a straight strip ($\theta = 0$).

When the bimetal is made in a spiral form, $\frac{dS}{dt}$ is greater than for a simple bimetal ring of the same heat-capacity; but the force F for a spiral is much decreased compared with that of a single ring having the same mass or the same value of $\frac{dS}{dt}$.

$$F \sim \frac{M\,I}{L^3} \sim \frac{M\,\delta^3\,B}{L^3},$$

where L = effective length } of bimetal;
B = width }
δ = arithmetic mean of both thicknesses;
M = elastic modulus; and
I = moment of inertia of the cross-section.

Incidentally a new bimetal may show considerable decrease in $\frac{dS}{dt}$ over a period of time. This may be minimized by thermal massage before calibration.

A test-method schedule has been prescribed[6] by the American Society for Testing Materials for testing thermostat metals.

Bimetallic-strip Arrangements.—The usual method is to place a strip or disc of the composite materials in the heated space, one contact being on the strip and the other on a convenient contact pillar nearby. When adjustment of the setting has to be made, say in an oven, trouble is sometimes experienced due to the binding of the thread of the adjusting screw, if it has been exposed to a moderately high temperature. Further, the contacts may be fouled by oils, varnishes, or other substances vaporized by the heat of the oven. It is advisable, therefore, where possible, to arrange that the adjustment and the contacts shall be outside the oven. This can be done by using a spiral bimetallic strip which moves a spindle emerging from the oven. The spindle then works the contacts. Alternatively, with a disc type of bimetal, the movement can be transmitted by a rod bearing on its surface.

It is sometimes found with bimetallic-strip thermostats that the contacts maintain themselves a small distance apart for considerable periods, while sparks pass between them and a singing sound is emitted. This effect is due to electrostatic attraction between the contacts, which periodically close and open again. By fitting a compensating plate[7] above the upper contact and connecting this to the lower contact, the critical "singing" conditions may be eliminated and normal operation of the contacts secured.

If any appreciable current is controlled through the contacts, a certain amount of wear is bound to ensue. The cause of this wear arises from a number of complicated factors, and the reader is referred to a paper by Betteridge and Laird[8] on this subject.

Other Uses of Bimetallic-strip Thermostats.—In a thermo-electrical circuit the electromotive force generated by the thermocouple depends, among other things, on the difference in temperature between the hot junction in the furnace and the cold junction at the head of the thermocouple. If the temperature of the cold junction varies, the readings of the galvanometer—either indicator or recorder—will vary, although the hot junction may be at a constant temperature.

Cold-junction Temperature Control.—Various methods have been devised to control the temperature of the cold junction, and the decision as to which method should be adopted depends on the degree of accuracy required and on the conditions under which the apparatus is to be installed. A convenient way of controlling the cold-junction temperature is to place the junction in an electrically controlled thermostat.

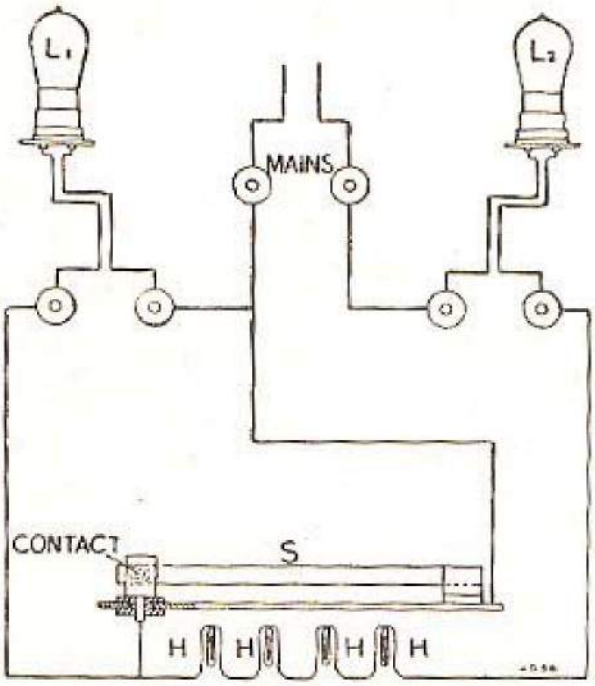

FIG. 46.—Circuit diagram of Cambridge Bimetallic Thermostat for cold-junction control.

The Cambridge bimetallic type thermostat for this purpose (Fig. 46) consists of four heater coils in series with two high-resistance carbon filament lamps giving a red and green light respectively and placed outside the apparatus. A bimetallic strip *S*, carrying an adjustable platinum contact at its end, is so arranged that when a definite temperature is reached, the distortion of the strip causes contact to be broken, which puts both lamps into the circuit. The resistance of the lamps decreases the number of watts dissipated in the heater coils *H*, and the temperature then drops until the bimetallic strip makes contact and shunts one lamp, thereby again increasing the number of watts dissipated by the heater coils. The bimetallic strip, heater coils and cold junction are immersed in an air-bath, placed in an outer metal tank, the space between the two vessels being well lagged to prevent undue heat loss. The lamps act as pilot lights, in addition to functioning as series resistances. A number of thermocouples can be controlled by this thermostat. The cold-junction temperature can be controlled to within about 0·5° C.

A bimetallic regulator unit is available which consists of a bimetallic strip operating contact-points of tungsten, the whole being mounted in a small glass tube say 7 cm. long by 1 cm. diameter and filled with inert gas. The unit has a low thermal capacity and the contacts do not become contaminated.

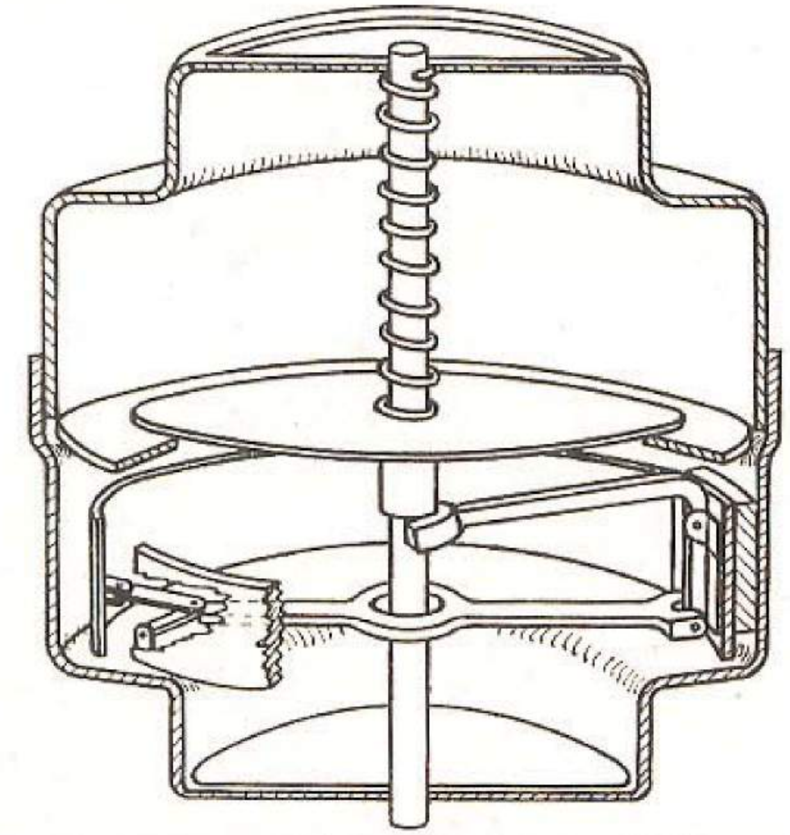

FIG. 47.—Car thermostat: bimetallic-strip type ("Thermet").

Bimetallic strips do not always operate through the medium of contacts, but may be used to regulate a pilot valve which controls a supply of steam or compressed air to operate a main valve.

Car Thermostats.—As stated in another chapter, the bimetallic principle is adopted[9] in the design of thermostats for regulating the temperature of the water-jackets of motor-cars. An example of this type of thermostat is the "Thermet," illustrated diagrammatically in Fig. 47. This thermostat functions in a similar manner to that described on page 58, but employs a bimetallic strip in place of a bellows. The bimetal is bent into semi-circular form, the ends being attached by means of two short arms to a lever. The longer arm of this lever terminates in a fork which raises the plate valve from its seating against the pressure of a spring. The heated water causes the strip to straighten and so move the lever by means of the two small connecting pieces.

Carburettors.—Thermostats have also been applied to adjust the carburettors of motor cars. The orifice of the jet can sometimes be varied by means of a needle-valve which permits of a greater flow of petrol when starting, which can be decreased by hand when the engine has warmed up. Other methods are to cut down the amount of air supply or to incorporate an auxiliary carburettor at this warming-up period. In all cases the actions can be made automatic with the assistance of a bimetallic element, situated either in the water system or attached to the exhaust manifold and connected electrically to the different control motions.

Fire Alarms.—Thermostats are sometimes employed either to give warning by ringing a bell or to operate sprinkler devices to extinguish fires. They come into operation when the temperature of a room reaches a certain value. These devices may consist of bimetallic strips which close electrical circuits when they bend. A bell can be made to ring continuously until the temperature falls or the alarm is cut off.

References to Chapter X.

(1) Timoshenko, Scientific Paper No. 178, Westinghouse Research Laboratory; and *J. Optical Soc. Am. and Rev. Sci. Instr.*, 1925, **11**, 233-255.

(2) Weber, *Temperature Measurement*, Edwards Bros., Ann Arbor, Michigan.

(3) Hood, *Bull. Amer. Soc. Test. Mat.*, 1942, **114**, 11.

(4) Eskin and Fritze, *Trans. Amer. Soc. Mech. Eng.*, 1940, **62**, (5), 433.

(5) Henry Wiggin & Co., Ltd., *Wilco-Wiggin Thermometal*, Publn. TH13, 1942, 24 pp.

(6) Amer. Soc. for Testing Materials, *A.S.T.M. Standards on Electrical-Heating and Resistance Alloys*, Publn. by the Society, 1941, B106, 40.

(7) Heilbrun and Turowski, *Phys. Zeits.*, 1931, **32**, 282.

(8) Betteridge and Laird, *J. Inst. Elec. Engrs.*, 1938, **82**, 625.

(9) Geschelin, *Automotive Ind.*, 1938, **79**, 78.

CHAPTER XI

ELECTRICAL-RESISTANCE THERMOSTATS.

THE property of change of electrical resistance of a material with temperature has afforded the basis for the design of a number of regulators. In a very simple and inexpensive form, this property can be adapted to control temperatures within moderate and satisfactory limits of fluctuation, whilst by elaboration it can be arranged to control within very fine limits. Some of the less elaborate types will be described first.

Salt Resistance.—When using a large number of solder pots, it is a great advantage to have the heating automatically controlled so that the workman may devote his whole attention to the work in hand. The thermo-electric pyrometric control method, described later, is applicable to this work but is very expensive, especially when a large number of pots are in use, each requiring a separate control. The cost of the salt-thermostat method is comparatively low. The temperature is held constant within fairly close limits and the device is strong mechanically, the latter being a distinct advantage in the case of solder pots. The principle on which this class of resistance thermostat depends is that salts, oxides, and non-metallic materials in general have a negative temperature-coefficient of electrical resistance, that is, the resistance usually decreases rapidly as the temperature approaches the melting-point. Above the melting-point further decrease is slight. In a number of cases, salts decrease their resistance from about 1,000 to 5,000 ohms per centimetre cube down to 1 to 5 ohms per centimetre cube when the temperature passes through a range of 10° to 15° C. (18-27° F.) at or near the melting-point of the salt. The reverse change occurs on cooling the salt. This change in resistance is constant over long periods of time under conditions of alternate heating and cooling, such as obtain in solder baths. Hence the changes in resistance of salts, when used in a cell contained in the solder pot and connected in series with a relay, may be used to operate a suitable switch for controlling the heating current of the pot. The salt resistance cell may be simply a steel tube.

The operation of the apparatus is very simple. For solder pots, a salt having a melting-point of about 400° C. (752° F.) is used. When the pot is cold, the resistance is high, but as the temperature of the solder rises, the resistance of the immersed salt decreases, but will not be low enough to allow sufficient current to pass to operate the relay until a temperature of approximately 400° C. is attained, when the strength of the current is such as to trip the relay, which in turn operates the switch cutting off the heating current. The current will continue to flow through the salt resistance until the temperature of the solder has dropped and the resistance of the salt has increased so much that very little current passes. The relay then returns to its original position and again switches on the heating current. This cycle of alternate heating and cooling repeats itself as long as the pot is in use. With gas- or oil-fired equipment, a magnetically operated valve for regulating the fuel supply is substituted for the switch.

This salt-resistance thermostat has been used on solder and Babbitt metal pots, aluminium melting-pots and oil-tempering baths. It has been found that the temperature remains constant to within 3° to 5° C. at 500° C. when the pot is not being worked.

Metal Resistance.—Molten metal can be used in place of a salt; the specific resistance of a metal increases on melting to about twice that in the solid state. A constant direct current, as control current, is passed through a mass of metal such as zinc, which is contained in the furnace or bath to be controlled. Where close control is needed, potential-leads are taken from the inside of the metal to a reflecting galvanometer, the reflected light from which can fall upon a photoelectric cell. The photoelectric cell then operates some form of relay, such as a thermionic valve, to control the furnace heating circuit. A coil of copper wire may be used instead of molten metal. A fuller description of the equipment used with these metal resistances is given below in the section dealing with Resistance Furnaces.

Iron Resistance.—It is well known that the resistance of iron wire increases rapidly over a limited range of temperature. This fact may be made use of to smooth out the effects of voltage variations in the heating-supply current to a furnace. The iron wire is enclosed in an atmosphere of hydrogen to prevent oxidation, and is placed in the electrical circuit in such a way that sufficient current passes through it to cause it to glow. A slight increase in the applied voltage increases the temperature of the iron, causing a rise in its resistance and a subsequent diminution in the current allowed to flow through the wire. It will be understood that the arrangement operates satisfactorily at a critical current only and is very little used for temperature-control.

Resistance Furnaces.

The heating coil of electrically-heated laboratory furnaces can be used as the sensitive element of a thermostat. The advantage of this arrangement is that no furnace space is occupied by any components of the thermostat. Further, since the heater and sensitive element are identical, there is no thermal lag between the two.

It is, of course, essential that the resistance of the heating coil should change to a reasonable extent with change of temperature, and the coil should not " deteriorate " rapidly ; that is, the temperature–resistance relationship should remain sensibly constant with time. To meet these demands the materials which may be used are platinum, platinum-rhodium, molybdenum, nickel, chromel or other similar materials ; but platinum or platinum-rhodium is preferably used at elevated temperatures. The disadvantages of a platinum-wound furnace are first, the expense, and secondly, it is not easy to arrange the winding to give a large zone of constant temperature, for owing to the high temperature-coefficient of resistance of platinum, hot spots tend to become hotter and vice-versa. Whatever kind of wire is used for the winding, it is desirable that the length of the winding be made five or more times its diameter in order to obtain a flat maximum in temperature-distribution along the axis of the tube.

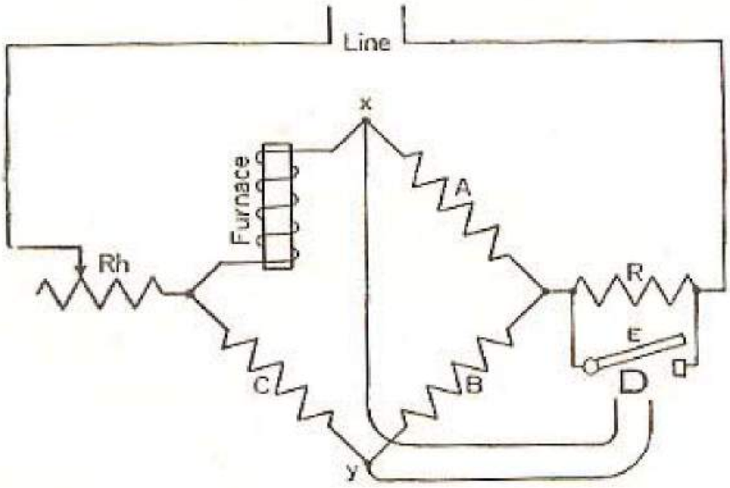

FIG. 48.—Schematic diagram showing basic principle of the Geophysical Laboratory thermostat.

This use of the heating coil of the furnace as a resistance element and means of control forms the basis of the thermostat designed by White and Adams and collaborators[1–4] at the Geophysical Laboratory. The same principle has been used by a number of other workers,[5–14] to whom reference is made later in the chapter. The original design of White and Adams having been modified in several details, these latter will be described after an account of the original arrangement has been given.

Geophysical Laboratory Thermostat.—The principle of the apparatus is that the heater of the furnace, having an appreciable temperature-coefficient of resistance, is associated with three other adjustable resistances whose temperature coefficients are negligibly small, to form a Wheatstone bridge. In the usual way, a change of temperature of the furnace resistance in either direction unbalances the bridge and produces an unbalanced current in the circuit, its direction depending on whether the temperature has become higher or lower than that for which the bridge was balanced.

The current from the mains passes through a fixed resistance R (Fig. 48), and through a rheostat Rh, the latter being so adjusted that, with R in the circuit, too little current flows, and with R shunted by the switch E, too much current flows, to maintain the furnace at the desired temperature. A suitable device at D, described later, which includes a galvanometer actuated by the current in the galvanometer circuit of the bridge, opens and closes the switch E as the resistance of the furnace becomes too high or too low respectively. When E opens, the current through the furnace is reduced, and the temperature and resistance of the heating coil decrease. Similarly when E closes, the temperature and resistance of the heating coil increase. Thus the resistance of the heating coil is caused to oscillate through a short interval on either side of some definite value, the average resistance remaining constant. The corresponding variation in the temperature of the wire of which the heating coil is made often amounts to several degrees, but the period of oscillation is seldom more than a few seconds, and because of lag, its effect on the constancy of temperature inside the furnace is usually too small to measure by ordinary methods.

It may be mentioned here that Turner (see p. 156) considers it inadvisable to improve the contact between the heating element and the sensitive element or regulator to such an extent as to identify them, as is done in this form of regulator. He argues that the heating coil on the furnace is hotter than its surroundings, including the furnace interior. This would not matter if the temperature-difference were constant; but the difference is proportional to the square of the supply voltage. When the heater and regulator are identical, a decrease in ambient temperature produces an increase in current supply and therefore an increase in the excess of heater temperature over the furnace-space temperature. Thus, fall of ambient temperature and rise of supply voltage severally depress the furnace-space temperature.

Reverting to the Geophysical Laboratory furnace, Fig. 49 shows the complete diagram of the original apparatus, F being the furnace. The bridge may be balanced by means of the sliding contacts x and y, by bringing them to the same potential, when the resistance of the furnace has any value between chosen limits. Contacts x and y are connected to the galvanometer through a synchronous rectifier S, which may be short-circuited by the switch Sw when direct current is used. The insulated boom (b) of the galvanometer is arranged to make either of the two contacts a and c, depending on the direction of the current through the galvanometer coil. If these contacts were used directly to break the heating current, trouble would be experienced due to their sticking and sparking, and a satisfactory remedy is to use a triode valve as an intermediate relay. As previously mentioned, the advantage of such a relay lies in the fact that its operating current, which must pass through the galvanometer contact, may be made less than 1 micro-ampere. The boom of the galvanometer is connected to the grid of the triode *T*, whose plate current passes through a high-resistance relay R_1. The potentials of the contacts *a* and *c* are so chosen that when the galvanometer closes contact *c*, very little current flows in the plate-filament circuit of the triode and relay R_1 is open; whilst when the galvanometer closes contact *a*, a moderate anode current flows and the relay closes. The closing of R_1 causes R_2 also to close and to short-circuit the resistance *R* in series with the bridge and furnace.

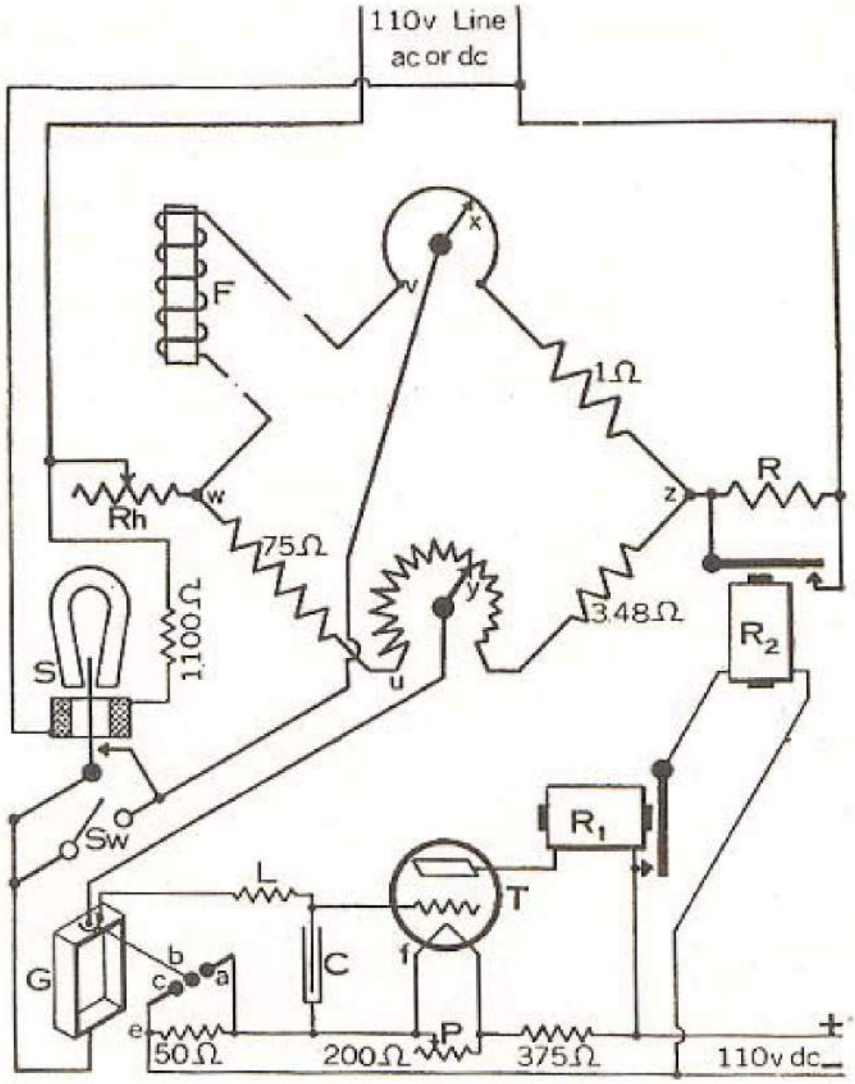

FIG. 49.—Circuit diagram of original Geophysical Laboratory thermostat.

The operation of the apparatus is as follows:—Assume that the furnace is hot and the bridge balanced; that the rheostat is adjusted so that with *R* in the circuit too little current flows, and with *R* short-circuited too much current flows, to maintain the furnace at its proper temperature; and that the relay and galvanometer contacts are in the positions shown in Fig. 49. Since the relay R_2 is open, the extra resistance R is in circuit and the furnace is cooling; the bridge becomes unbalanced and b swings towards the right. When the contact b reaches a, the grid of the triode T is brought to a potential f which causes the anode current to increase and close the relay R_1. The closing of R_1 sends a current through R_2, also causing it to close. The extra resistance R is now short-circuited by R_2, causing the furnace temperature to rise. This makes b move towards the left; when it reaches c the grid is brought to the negative potential e which is sufficient practically to stop the flow of current in the anode circuit. As a result, R_1 and in turn R_2 open, restoring the extra resistance R. This causes the furnace to cool, and b again swings towards the right, completing one cycle.

This system has, however, the following disadvantages:—

(1) In damp weather, surface leakage may occur which will affect the grid potential of the valve.

(2) Different potentials for the filament, grid bias, and anode are required with this type of valve.

(3) Valves having an output of high voltage will sometimes sustain a loss of grid charge through internal leakage.

Modifications of Details.—As suggested by J. H. Hibben,[13] a hot-cathode tube relay may be substituted for the triode valve, with a simplification of the control system. The hot-cathode tube consists essentially of a cylindrical aluminium cathode and an anode and grid of nickel wire protruding from a glass tube, and contains neon, mercury vapour or preferably argon at low pressures. The cathode-to-anode impedance is practically infinite, whilst the anode-to-cathode impedance at 8 milliamperes is 20,000 ohms. Hence the tube is self-rectifying. If the grid is thoroughly insulated it will assume a high negative charge, blocking any current flow in the tube. However, if the charge is allowed to leak off, either through a high resistance or by capacity effect, an anode-to-cathode current will flow. This happens here when the galvanometer relay boom arm touches the contact a (Fig. 49). A rectified current then flows from anode to cathode through the windings of relay R_1 and thence to complete the circuit.

A further modification [14] of this part of the system has been suggested in which a light beam and photo-sensitive cell are employed. In this arrangement (Fig. 50A) the stiff part of the suspension of the galvanometer is given a rectangular bend, and a screen in the form of a quarter-cylinder of very thin metal is mounted on the bend so that its axis is coaxial with that of the suspension. A small plane mirror is mounted near the axis of the quarter-cylinder. This is supported on a rod entering from that portion of the remaining three-quarter cylinder space through which the quarter-cylinder does not move. A beam of light from a lamp is focused on the mirror and reflected from it through a lens into a photo-electric cell (Fig. 50B). Rotation of the galvanometer coil causes the screen to intercept the light beam and thereby affect the photoelectric cell, which in turn controls the heating circuit.

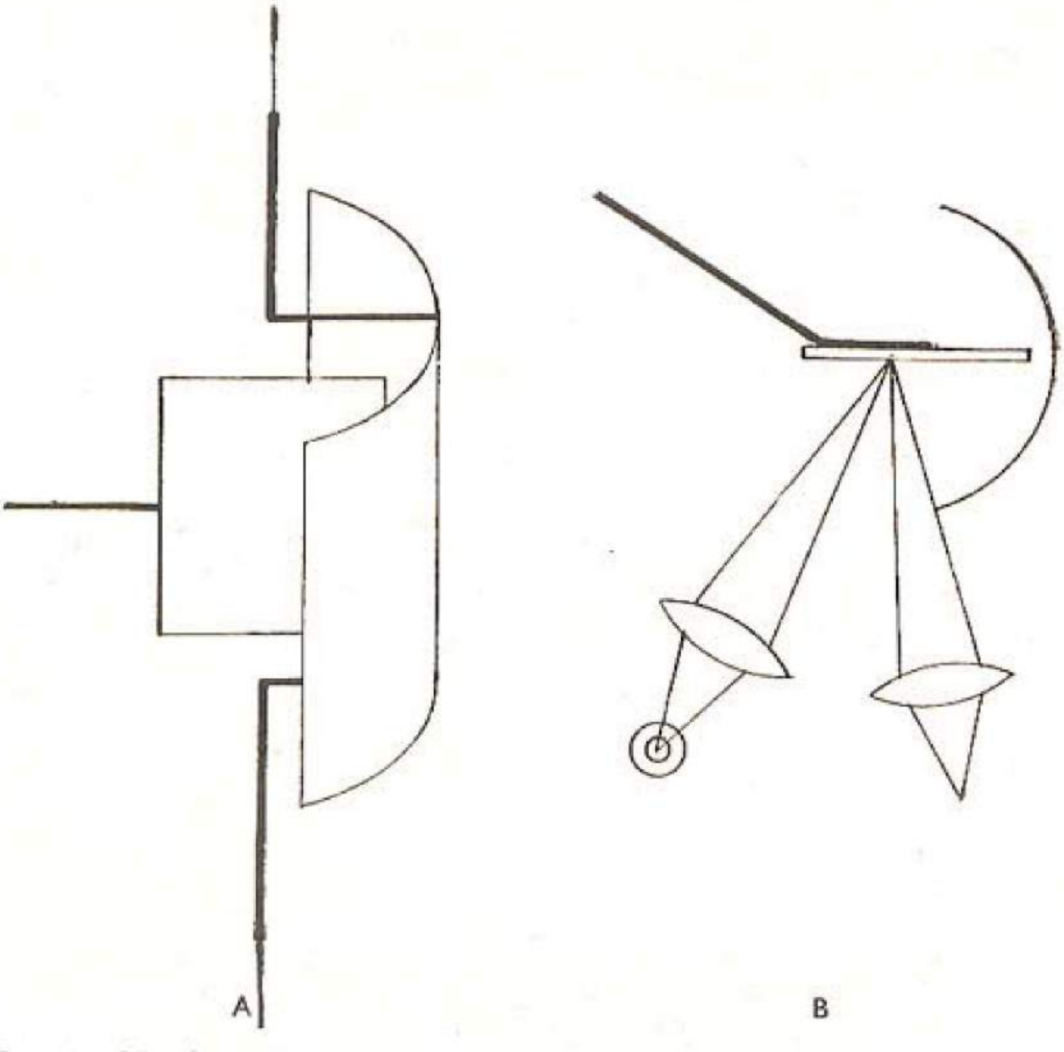

Fig. 50.—Modified galvanometer suspension for Geophysical Laboratory thermostat.

Gouy Feature.—The Gouy feature (pp. 19-22) can be applied in this system by a horizontal oscillation of the light beam with a period of 8-10 seconds and an amplitude of 2-6 mm. This may be brought about by the appropriate movement of the focusing lens with the aid of a motor, which may be the same as that used for stirring the bath. During a fraction of the period of oscillation of the light, the beam falls on the photoelectric cell, and during the remaining fraction it is intercepted by the vane. The relative magnitude of these two fractions is fixed by the position of the vane, which in turn is fixed by the balance in the bridge.

Slow-cooling.—An interesting auxiliary control can be introduced into the design. A slide on a rheostat in the heater circuit is moved by a motor in such a way as to increase the heater current while the heater current is on, and in the opposite direction while the heater current is off. Thus, for a cycle in which the intervals on and off are equal, there is no resultant resistance change, while for a cycle in which the on and off are unequal, the resultant change of resistance forces the intervals towards equality, and if the demand remains steady, soon brings them to equality. The resistance changes have to be made slowly to avoid introducing instability or "hunting."

Auxiliary Furnace.—The electrical power supplied to the furnace varies as the square of the voltage or as the square of the current. The thermostat may therefore be arranged as an auxiliary furnace to maintain a constant root-mean-square voltage or current for a main furnace. This is an advantage in cases where the heater of the main furnace has, due to cost, to be made of cheaper material of low temperature-coefficient or of material which may change its properties at high temperatures. After equilibrium has been reached between the temperature of the auxiliary furnace and that of its surroundings, the mean power supplied to the auxiliary during each cycle depends only on the temperature of the furnace and that of its surroundings. The influence of the surrounding temperature may be made negligible by operating the auxiliary furnace at a high temperature, say 1,200° C., while the mean resistance of the heater may be kept constant by making the heater of a material such as platinum, which does not deteriorate at this temperature. Another method of compensating for variations in ambient temperature is by placing a copper coil in one arm (A in Fig. 48) of the bridge. The coil is wound on a metal spool and placed in the open near the bridge coils. It is advisable to increase the thermal lag of the coil by covering it with, say, tape to make it respond to temperature-changes at about the same rate as the furnace. A slow drift of temperature will occur if the auxiliary furnace winding is kept at temperatures above 1,000° C. for prolonged periods. The drift is less with platinum-rhodium than with platinum winding. For constant voltage the load is connected in parallel with the bridge, that is, across w and z in Fig. 49, and for constant current in series with the bridge. This method is useful to eliminate the effect of variable line-voltage, where the usual arrangement of the thermostat is ineffective.

Modifications of the Principal Components of the Geophysical Laboratory form of Thermostat.—Dealing now with some modifications of the main details of the furnace, that suggested by Brown[15] may be considered first. In order to prolong the life of the platinum element in the furnace, a large part of the heat may be generated by a more suitable resistance element. An alundum tube is wound in three sections, the two outer sections being wound with Brightray ribbon in two layers (*A*, *B* and *C*, *D*—see Fig. 51), separated by a layer of alundum cement. The middle section is wound with Brightray ribbon and 35 S.W.G. platinum wire, arranged as a double-threaded screw in the same plane (*E*, *Pt*). The resistances are so connected that a Wheatstone bridge arrangement is formed with one arm consisting of the platinum resistance and the other three of the Brightray windings, the latter having, of course, a lower temperature-coefficient of resistance. The bridge is in balance at one temperature only, and this temperature can be fixed by the variable resistance R_1, and the slide wire connecting *A* and *Pt*. When the galvanometer *G* is deflected, due to temperature-variation in the platinum winding, a contact, carried by its moving coil, touches one or other of two fixed contacts. The relay *R* is thereby energized and opens, or closes, a mercury switch connected across part of the resistance R_2. The current in the windings is therefore too large, or too small, to maintain the desired temperature depending on whether R_2 is out of, or in, the circuit. To minimize the effect of these fluctuations of temperature in the furnace space, the walls are made of an inner tube of silica, separated from the outer tube of alundum by a nickel sheath, which incidentally is earthed. The object of the nickel sheath is to prevent electrical leakage from the windings of the furnace tube. This thermostat can be arranged to give slow-heating or cooling by changing the balance of the bridge continuously. This is done by interposing a second slide wire between *B* and *E*. Connection is made to the galvanometer by a slider on this wire, moved at a suitable speed by mechanical means.

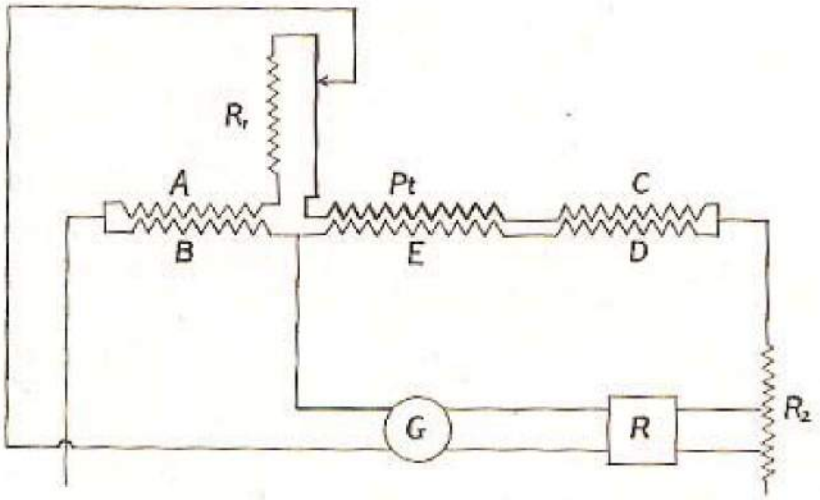

Fig. 51.—Brown resistance furnace thermostat.

Separate Coil and Heater.—It is sometimes necessary to separate completely the thermometer coil and the heater, where the heating element has too low a temperature-coefficient, or where the furnace is heated by oil or gas. In other cases the separation is made for convenience. Under these conditions the coil can be made to function as a resistance thermometer only, and the current is then varied through the bridge by means of the relay. A separate thermometer and heater coil have been used by Prosser.[16] A further point of interest in this type of thermostat is that alternating current is used, which makes it possible to obtain a large amplification, by the use of valves, of any out-of-balance voltage in the bridge-circuit system of control.

Principle of the Prosser Thermostat.—The thermostat circuit (Fig. 52) contains a relatively low-resistance, non-inductive platinum thermometer *a*, in a non-inductive bridge circuit, fed from a 4-volt winding on a transformer connected to the 50-cycle mains. Any out-of-balance voltage, due to the temperature of the thermometer deviating from the value set by the slide wire in the bridge circuit, is amplified by the two-stage valve amplifier *b* and then applied to the grid of the control valve *c*. The anode circuit of this valve is connected, through reversing contacts *d*, across a 110-volt winding on the mains transformer, but is in series with a large condenser *e*. This condenser is, in turn, connected to the grid circuit of a relay valve *f* which has a telephone-type relay *g* in its anode circuit. This relay controls the current to the furnace through another larger relay *h*, and also operates the reversing contacts *d*.

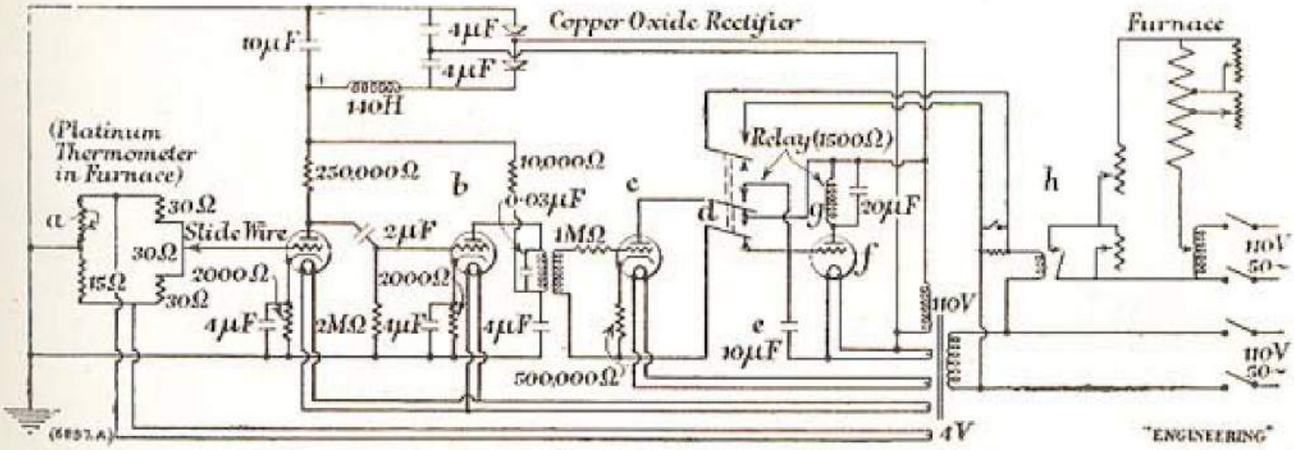

FIG. 52.—Circuit diagram of Prosser thermostat.

The sequence of operations can be understood more easily if it is assumed that the temperature is correct, so that there is no out-of-balance voltage from the bridge circuit. Starting from a point in the cycle where the contacts are in the position shown in Fig. 52, *i.e.* when the grid of valve *f* is negatively charged and the rectified anode current is small, the control valve *c* will pass a small rectified current which slowly reduces the negative charge of the condenser *e*, thus gradually increasing the anode current in the relay valve *f*. At a certain value of this current the relay *g* will operate and reverse the contacts d. The rectified current passed by valve c will now charge the condenser in the reverse direction, and so gradually reduce the anode current in the relay valve f. The relay g, will, however, remain closed until this current has fallen to a certain value, when it will open and again reverse the contacts d, thus repeating the cycle. The values of the components are so chosen that the complete cycle occupies about 40 seconds, the furnace thus being supplied with maximum current for about 20 seconds, and with a reduced current for the subsequent 20 seconds.

Considering now the case when the temperature of the platinum winding is slightly low. There will then be an out-of-balance alternating-current voltage applied to the grid of the control valve c, which will be approximately proportional to the temperature-deviation, the connections being so arranged that this voltage will be in phase with the anode voltage when the relay is in the open position, as in Fig. 52. The rectified current passed by the control valve will, therefore, be greater than normal, hence the condenser e will charge up quickly, causing the relay to close in less than 20 seconds. When the relay closes, however, the contacts d are reversed, so that the anode voltage on the control valve will now be out of phase with the grid voltage. As current is only passed by the valve during the half-cycle when the anode is positive, and as during this time the grid will be in the negative half-cycle, the mean rectified current will be less than normal and the condenser e will charge slowly, causing the relay to take longer than 20 seconds to open.

Should the temperature of the furnace be high, the out-of-balance voltage will be in opposite phase, and the converse of the preceding will apply.

It will be seen that the control obtained is directly proportional to the deviation of the temperature from normal, so that, provided the time-lag between a change in the mean furnace voltage and the resulting response of the platinum thermometer is less than a certain value, the thermostat will control the temperature without " hunting." Care has to be taken to ensure that the grid and anode voltages on the control valve c are as nearly as possible in phase, or antiphase ; and to obtain this, an optimum value of the condenser across the coupling transformer can be determined by trial. For this purpose a cathode-ray oscillograph was used by Prosser. There will also be a certain amount of extraneous pick-up from the mains, and some out-of-phase component, but their effect is to increase the frequency of operation of the relay without appreciably affecting the sensitivity of control.

Alternative Circuit.—By a slight modification of the circuit shown in Fig. 52 it is possible to increase the maximum sensitivity about four times, at the same time gaining other advantages. This form of the thermostat was in the experimental stage at the time of writing.

The revised control circuit shown in Fig. 53 differs from that of Fig. 52 mainly in that the control valve *c* does not now act as a kind of variable resistance directly in series with the condenser *e*, but is in this case used to supply a variable voltage to charge the condenser *e* through a fixed resistance.

The reason for the change is that it is possible to maintain the grid circuit of the control valve at a constant potential, and there is thus less risk of extraneous pick-up. The control-valve circuit is now less sensitive, but compensation in the form of increased amplification is provided by coupling the low-impedance bridge circuit to the high-impedance amplifier through a microphone-type transformer. A condenser of 0·1 μF., shunted across the secondary winding, brings the output from the amplifier into phase with the anode voltage of the control valve. The stability of the amplifier has been increased by eliminating the condensers across the cathode resistances, thus causing negative feed-back to the grids. An additional variable resistance, having a logarithmic scale, may be inserted in the cathode circuit of the second stage, to increase the negative feed-back and to control the sensitivity. Owing to the fact that increase of frequency makes the cathode-heater capacity reduce the negative feed-back, small condensers are shunted across the anode circuits to guard against parasitic oscillations. As the control valve *c* does not now have its anode-cathode connections reversed when the relay *G* operates, it is necessary to make separate provision for reversing the phase of the alternating-current supply to the anode; or alternatively, the phase of the grid voltage may be reversed.

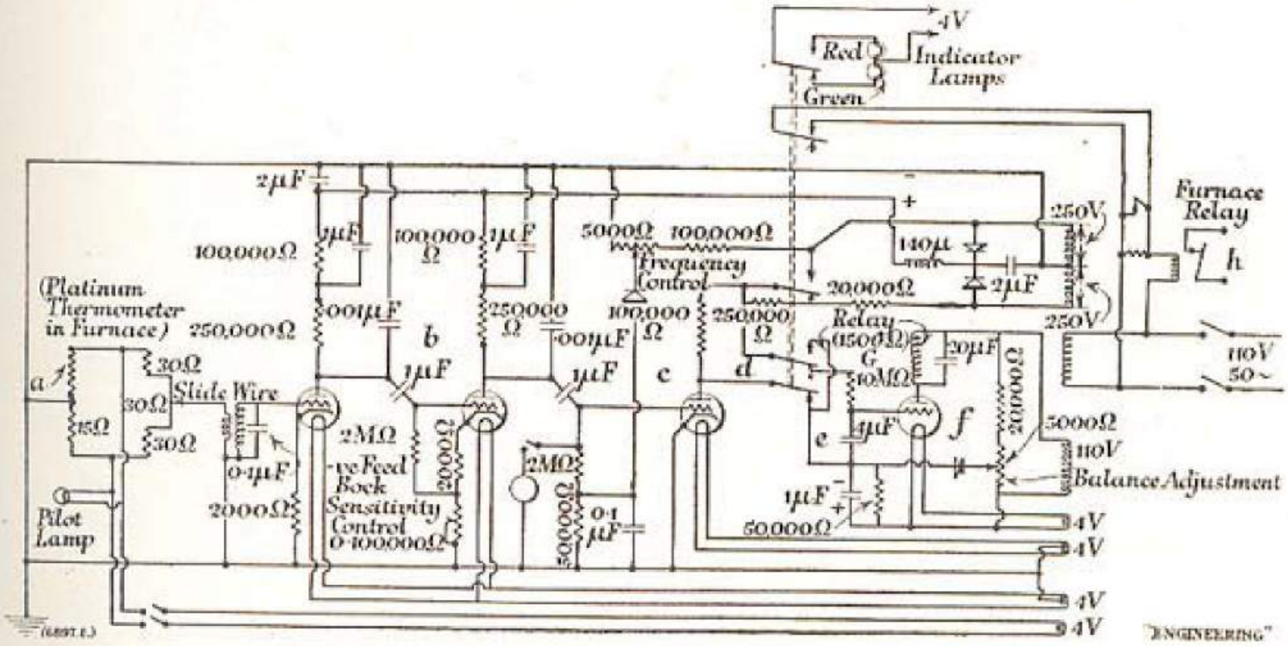

Fig. 53.—Modified control circuit in Prosser thermostat.

This is done by means of an earthed, centre-tapped winding on the transformer, using an additional set of contacts on the relay to connect the anode circuit to either end of the winding alternately. The same winding is used to give a full-wave rectified supply to the amplifier through two small Westinghouse copper-oxide rectifiers. A high resistance, shorted between two of the relay contacts, maintains the control-valve anode voltage when the relay is operating, and prevents it from becoming stuck in an intermediate position. A resistance, included in one of the transformer leads, limits the short-circuit current, should the relay contact springs be pressed together accidentally.

The normal frequency of operation of the relay can be varied by altering the voltage drop across the anode resistance of the control valve. This is achieved by altering the grid bias obtained from a small copper-oxide rectifier, tapped across a potentiometer in the anode supply. A similar grid-bias circuit is provided for the relay valve *f*, and is adjusted so that, when the bridge is balanced, the relay will remain in the open and closed positions for equal periods.

It should be possible to provide an additional control proportional to the rate of change of the deviation, hence eliminating hunting in unstable conditions. This could be done conveniently by varying the gain of the amplifier through a suitable control. With a high-gain amplifier it would probably be desirable to use a different frequency from that of the mains for the bridge supply, in which case the control valve could be of a frequency-changer type, with the reference alternating-current voltage applied to an auxiliary grid.

The Cooke and Swallow Thermostat.—The resistance type of thermostat designed by Cooke and Swallow[17] also uses the temperature-sensitive resistance in the form of a thermometer in the furnace or bath. The design (Fig. 54) has a number of interesting features to which reference may be made.

The form of the contact make and break is one of these features. Using a Weston relay, it was found that, owing to sticking of the contact-pieces, a considerable current through the coil in the reverse direction is necessary to break contact once it is made. To overcome this difficulty, the moving coil is placed in series with a winding of a telephone transformer. The other winding of the transformer is connected across the mains in series with a 200,000 ohms resistance and a mechanical contact-maker, which makes and quickly breaks contact every 15 secs.

The sudden interruption of current in the winding of the transformer induces a small momentary current in the other winding in series with the relay, giving the pointer a sudden " kick " and pulling it from the contact-piece.

In place of the mechanical contact-breaker, use may be made of the intermittent discharge from a neon lamp [18, 19] when connected

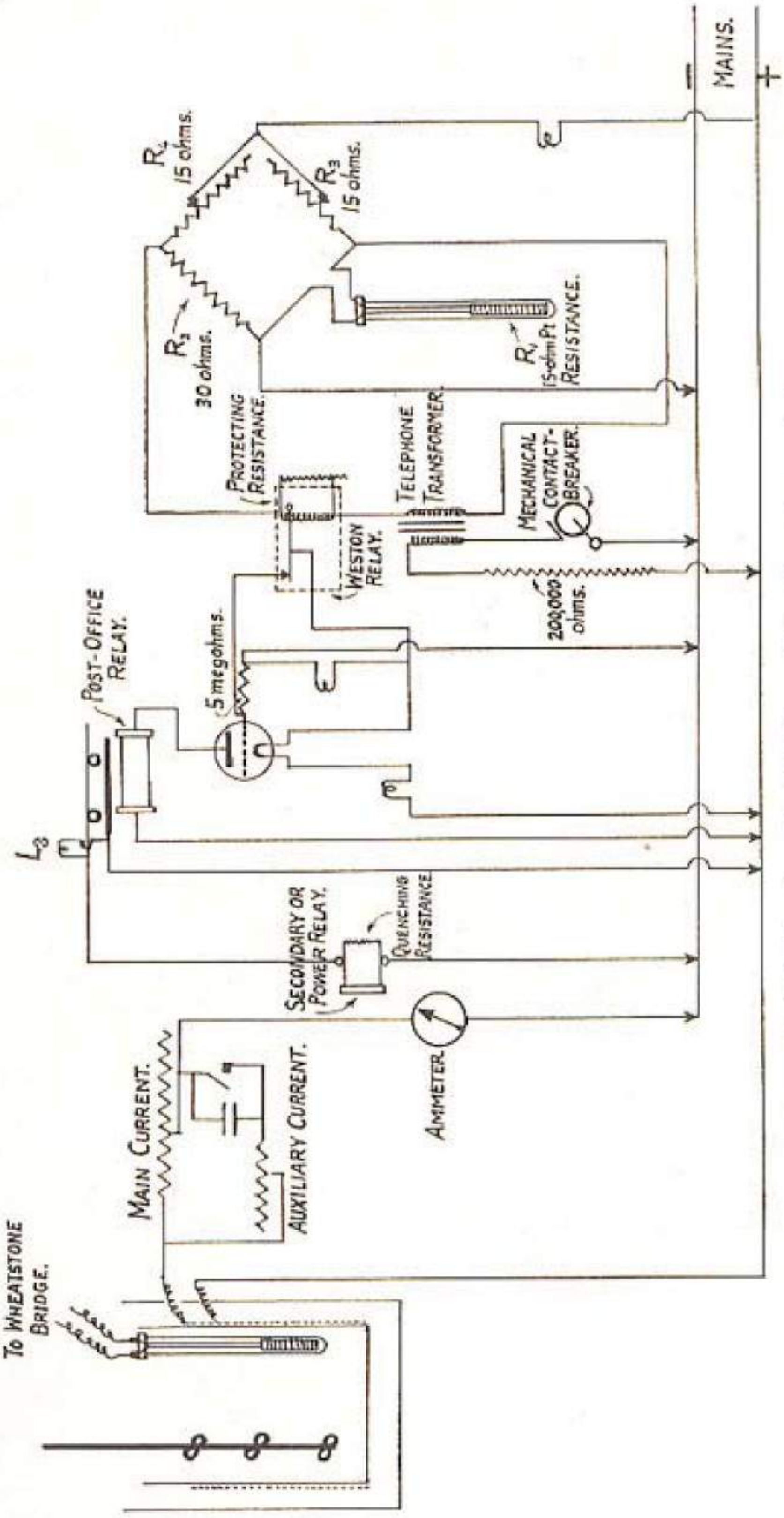

FIG. 54.—Wiring circuit of Cooke and Swallow thermostat.

across the mains in series with a high resistance of 5 megohms and shunted by a large-capacity condenser of 6 to 8 microfarads.

The contacts of the Weston relay may conveniently be made to operate a triode-valve relay. Fig. 55 illustrates diagrammatically the circuit [20] of the relay used in this thermostat.

L_1 and L_2 are resistances or lamps in series with the filament of the valve, and suitably chosen to give the correct heating current for the filament. If the grid is maintained at the same potential as the filament, anode current will flow through the relay windings to the positive main, sufficiently to operate a post-office relay. By connecting the grid to a point of sufficient negative potential to the filament, this anode current ceases. In the arrangement shown in Fig. 55, the grid is normally maintained at a negative potential of 110 volts with respect to the filament by means of the 5-megohm grid leak connected to the negative main, and no current flows through the relay coil. The Weston relay contacts are connected to the grid and the negative end of the filament respectively. When the Weston relay makes contact, the grid is connected directly to the negative end of the filament, bringing it to the same potential as the filament. Anode current then flows and operates the post-office relay.

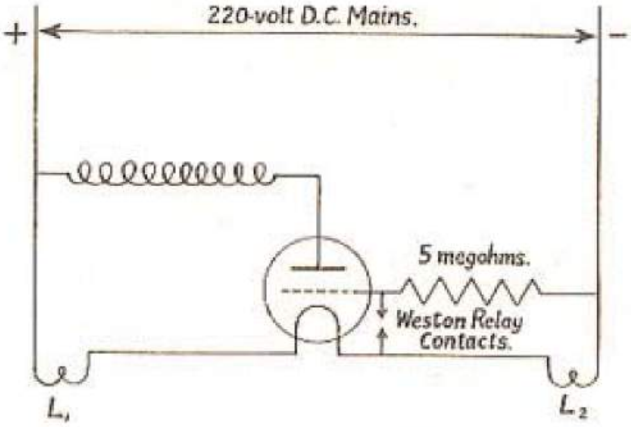

FIG. 55.—Valve-type relay circuit (Beaver and Beaver) for Cooke and Swallow thermostat.

This arrangement is an extremely sensitive one, a minute movement and pressure of the Weston relay contacts being quite sufficient to operate the post-office relay. To protect the contacts of the post-office relay from damage by excessive sparking, a quenching resistance (Fig. 54) is connected across the windings of a power relay, which is used to cut off the main heating current. Lamp L_3 also minimizes sparking. A rheostat with an "off" position is shunted across the coil of the Weston relay to limit the current passing through it while preliminary adjustments are being made. The Weston relay has to be carefully insulated from vibration to prevent chattering of the contacts.

The use of a resistance thermometer in conjunction with an electron-tube amplifier has been described by Walsh and Milas.[21]

and with a thyratron circuit by Zabel and Hancox [22] and also by Henny.[23]

Utilization of the Resistance-Current-Voltage Relationship as a Means of Control.—If the temperature of an electrical-resistance furnace rises and the resistance increases, the ratio of the current flowing through the furnace to the voltage across it will decrease. This effect has been made use of by R. Proctor and R. Douglas [24] in a simple control device.

The principle of the regulator is shown diagrammatically in Fig. 56.

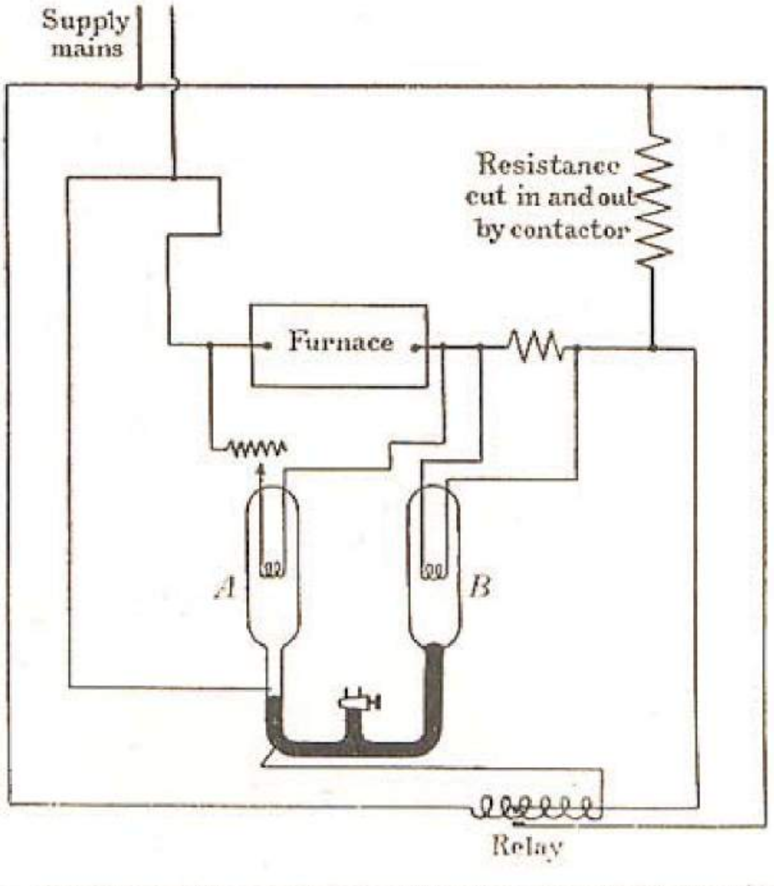

FIG. 56.—Principle of the Proctor and Douglas temperature-regulator.

A and *B* are two glass bulbs filled with air at atmospheric pressure, and connected together by a mercury manometer. Mounted in each of the bulbs is a heater filament. The filament in the bulb *A* is connected so as to be heated in proportion to the voltage across the furnace, while the filament in bulb *B* is heated in proportion to the current flowing through the furnace, as shown in Fig. 56. If the temperature of the furnace rises and the resistance increases, the ratio of the current flowing through the furnace to the voltage across will decrease. As a result the current passing through the coil enclosed in *A* will increase relative to that flowing through the coil in *B* and thus cause the air pressure in *A* to increase compared with that in *B*. This will cause the mercury in the manometer to fall in the left limb, breaking the relay current and reducing the power supplied to the furnace by inserting a resistance in series with the furnace. The regulator is equally applicable to a furnace having a negative temperature-coefficient by interchanging the voltage and current

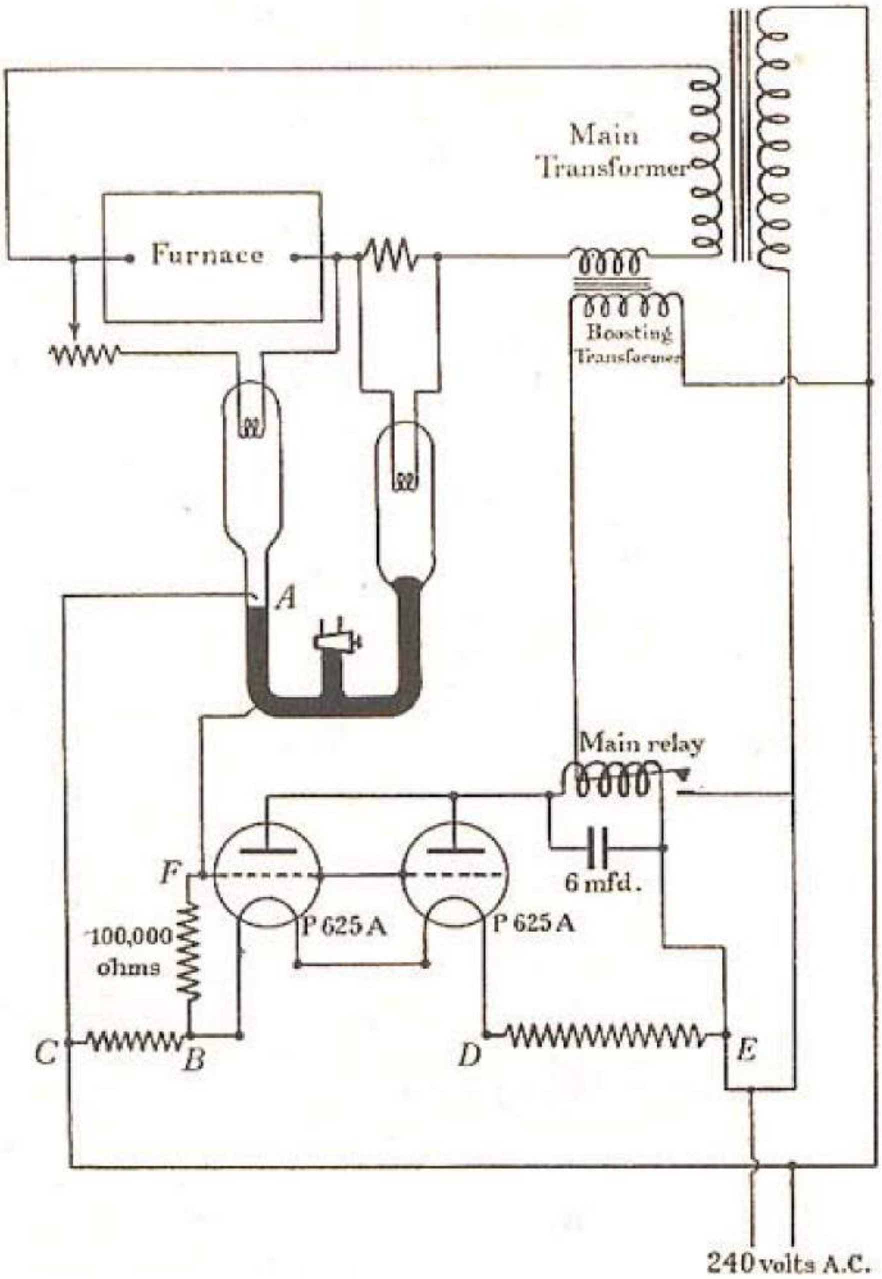

Fig. 57.—Proctor and Douglas regulator circuit using valve relay.

connections of the two bulbs. To avoid fouling of the mercury contacts, it is advisable to use a thermionic-valve relay, as shown in Fig. 57.

References to Chapter XI.

(1) White and Adams, *Phys. Rev.*, 1919, **14**, 44.
(2) Roberts, *J. Opt. Soc. Amer. and Rev. Sci. Instr.*, 1925, **11**, 604.
(3) *Id.*, *J. Wash. Acad. Sci.*, 1921, **11**, 401.
(4) *Id.*, *J. Opt. Soc. Amer.*, 1922, **6**, 965 ; also 1925, **11**, 171.
(5) Bunting, *J. Amer. Ceramic Soc.*, 1923, **6**, 1209.
(6) Pearson and Anson, *Proc. Phys. Soc.*, 1922, **34**, 175.
(7) Brown, *J. Sci. Instr.*, 1939, **16**, 195.
(8) Laby and Hopper, *Nature*, 1939, **143**, 240.
(9) Roebuck, *Rev. Sci. Instr.*, 1932, **3**, 93.
(10) Moser, *Zeits. f. techn. Physik*, 1932, **13**, 383.
(11) Rieche and Grau, *ibid.*, 1931, **12**, 284.
(12) Beattie and Jacobus, *J. Phys. Chem.*, 1930, **34**, 1254.
(13) Hibben, *Rev. Sci. Instr.*, 1930, 1285.
(14) Hibben, *ibid.*, 1932, **2**.
(15) Brown, *J. Sci. Instr.*, 1939, **16**, 195.
(16) Prosser, *Engineering*, 1939, **148**, 95.
(17) Cooke and Swallow, *J. Sci. Instr.*, 1929, **6**, 287.
(18) Pearson and Anson, *Proc. Phys. Soc.*, 1922, **34**, 175.
(19) Clarkson and Stephenson, *J. Sci. Instr.*, 1924, **1**, 173, and 1925, **2**, 154.
(20) Beaver and Beaver, *J. Ind. and Eng. Chem.*, 1923, **15**, 359.
(21) Walsh and Milas, *J. Ind. and Eng. Chem.* (Anal. edn.), 1935, **7**, 122.
(22) Zabel and Hancox, *Rev. Sci. Instr.*, 1934, **5**, 28.
(23) Henny, *Electron Tubes in Industry*, Chap. IV., McGraw-Hill, 1934.
(24) Proctor and Douglas, *J. Sci. Instr.*, 1932, **9**, 192.

CHAPTER XII

INDICATOR AND RECORDER CONTACT TYPES OF REGULATOR.

THE contact type of regulator is used both in the laboratory and in industry. Temperature indicators and recorders have a pointer attached to the galvanometer if the pyrometer is of the thermoelectric or resistance type, and a pointer attached to the Bourdon-tube gauge if of the liquid-expansion or vapour-pressure type. The movement of these pointers can be utilized to control temperature. The pointers have, however, very little mechanical power behind them; indeed, the galvanometer pointer has practically none. In general, adjustable contacts are arranged on either side of the pointer at the desired temperature, and deviation of the pointer from this value will cause the closing of one or other of the contacts. This may be done either directly or with the aid of an auxiliary mechanism.

Direct closing of the contacts is possible with the Bourdon-tube gauge type, since there is a small amount of power available. In this case the pointer carries contacts, but with a galvanometer movement an auxiliary form of power is necessary. The galvanometer movement then only performs the function of determining which contact shall be closed by the auxiliary mechanism. One contact is used for closing the main circuit when the temperature falls below the value determined by its position, whilst the other contact similarly switches off the current when the temperature determined by its position is exceeded. The main circuit is usually operated through the medium of a relay.

The Gouy principle can be applied to the thermoelectric form of instrument by adding an oscillating voltage to the thermocouple voltage. This is produced by passing a small current through a resistance periodically varied from 0 to 10 ohms by the movement of mercury over the resistance. The resistance and mercury are contained in a U-tube which is oscillated at 9 cycles or so per minute. For maximum effectiveness the oscillating voltage should only be 10 to 20 per cent. greater than the dead zone of the contacting galvanometer.

An example of the type of instrument in which the contact is closed directly by the movement of the pointer is shown in Fig. 58. The two indexes can be set at a distance apart, so that the temperature can fluctuate within a range. The contact arms, carried on the two indexes, are pivoted and controlled by a spring in such a way that the pointer is able to continue its passage across the scale, above or below the points at which contact is made, and indicate the temperature approximately. The spring serves to restore the contact arm to its original position on release.

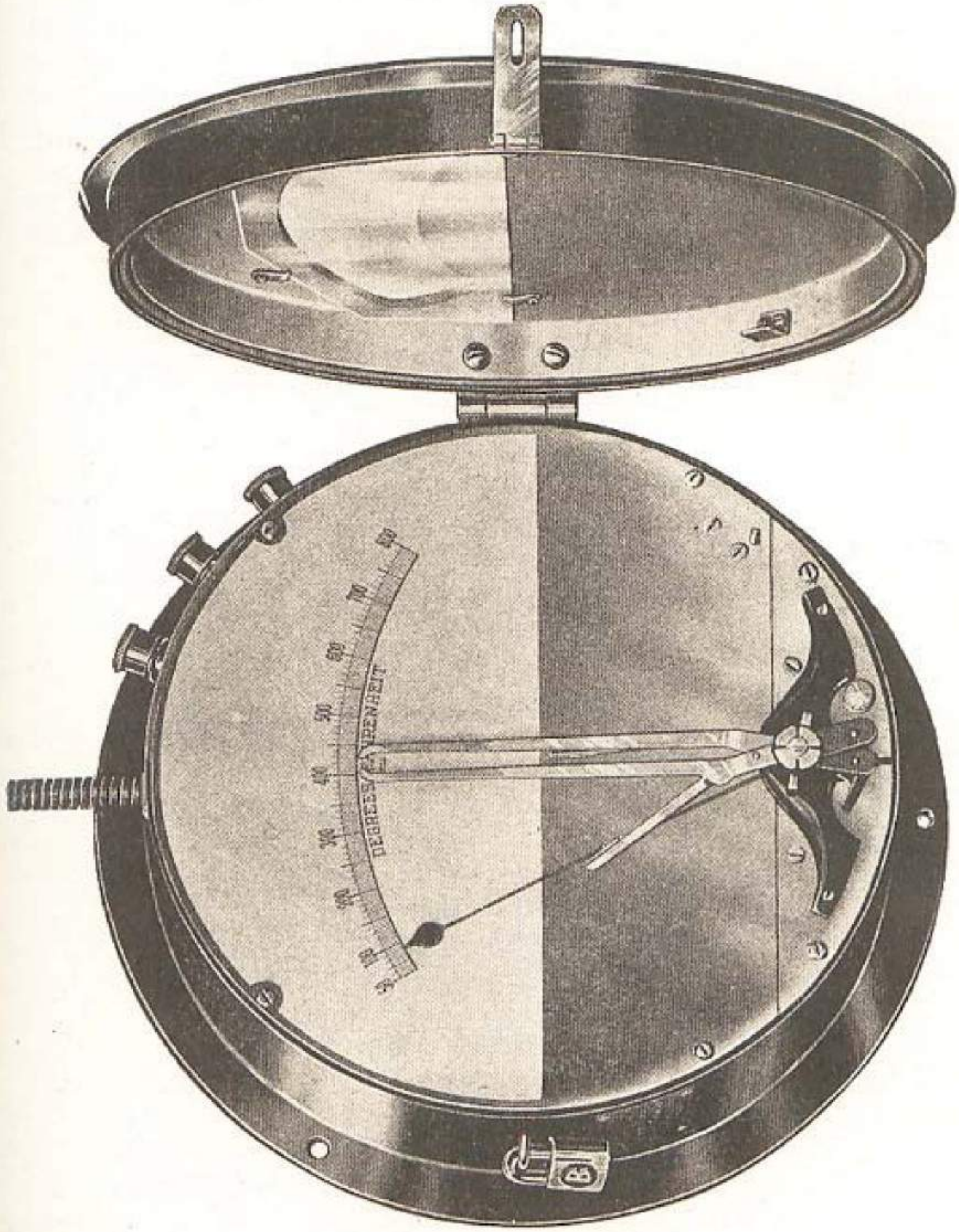

FIG. 58.—Brown control thermometer.

A novel contact device in one form of *Drayton* regulator is a small magnet attached to the fixed contact, so that when the moving contact comes within its field it is attracted and makes firm contact. The circuit is broken with snap action, thus minimizing sparking.